Version of December 13, 2024

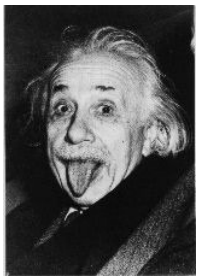

Plane Waves and Penrose Limits

Matthias Blau

Institut de Physique, Université de Neuchâtel, Rue Breguet 1
CH-2000 Neuchâtel, Switzerland

Updated versions of these notes will be available from
`http://www.blau.itp.unibe.ch/Lecturenotes.html`

Contents

1 Preface **3**

Introductory Comments . . . 3

Further Reading . . . 4

Bibliographical Acknowledgements . . . 5

2 Plane Waves I: Metrics, Geodesics and Curvature **6**

2.1 Plane Waves in Rosen Coordinates: Heuristics . . . 6

2.2 From pp-waves to plane waves in Brinkmann coordinates . . . 7

2.3 Geodesics, Light-Cone Gauge and Harmonic Oscillators . . . 10

2.4 String Mode Equations for Plane Waves . . . 13

2.5 Curvature of Plane Waves . . . 15

2.6 Curvature Invariants of Plane Waves (are zero) . . . 16

2.7 Singularities of Plane Waves (nevertheless exist) . . . 17

2.8 From Rosen to Brinkmann coordinates (and back) . . . 18

2.9 More on Rosen Coordinates . . . 21

2.10 Exercises for Section 2 . . . 23

3 Plane Waves II: Symmetries **25**

3.1 The Heisenberg Isometry Algebra of a Generic Plane Wave . . . 25

3.2 Symmetric Plane Waves . . . 26

3.3 Singular Scale-Invariant Homogeneous Plane Waves . . . 28

3.4 A Peculiar Conformal Equivalence . . . 29

3.5 Yet More Homogeneous Plane Waves . . . 30

3.6 Exercises for Section 3 . . . 31

4 Penrose Limits I: via Adapted Coordinates **33**

4.1 Summary of the Construction . . . 33

4.2 Adapted Coordinates for Null Geodesics . . . 34

4.3 Adapted Coordinates and Hamilton-Jacobi Theory . . . 35

4.4 The Penrose Limit . . . 36

4.5 Covariance of the Penrose Limit . . . 39

4.6 Some elementary hereditary properties of Penrose limits . . . 39
4.7 Example I: The Penrose Limit of $AdS \times S$ space-times . . . 42
The Penrose Limit of $(A)dS$ (is flat) . . . 42
The Penrose Limit of $AdS \times S$ (is more interesting) . . . 42
4.8 Example II: The Penrose Limit of the Schwarzschild metric . . . 44
4.9 Exercises for Section 4 . . . 49

5 Penrose Limits II: The Covariant Description 51
5.1 Curvature and Penrose Limits . . . 52
5.2 Penrose Limits and Geodesic Deviation . . . 53
5.3 Penrose Limits, Geodesic Congruences and Hamilton-Jacobi Equations . . . 54
5.4 The Penrose Limits of a Static Spherically Symmetric Metric . . . 56
5.5 Schwarzschild Plane Waves and their Scale-Invariant Near-Singularity Limits . . . 58
5.6 FRW Plane Waves and their Scale-Invariant Near-Singularity Limits . . . 61
5.7 Exercises for Section 5 . . . 65

6 The Universality of Penrose Limits of Power-Law Type Singularities 66
6.1 Szekeres-Iyer Metrics . . . 66
6.2 Null Geodesics of Szekeres-Iyer Metrics . . . 68
6.3 Penrose Limits of Power-Law Type Singularities . . . 69
6.4 The Role of the Dominant Energy Condition . . . 73
6.5 Exercises for Section 6 . . . 76

A General Relativity: Notation and Conventions 78

B The Hamilton-Jacobi Construction of Adapted Coordinates 80

C The Null Geodesic Deviation Equation (following [40]) 82

D Generalisations of Section 5.4: Brane Metrics, Isotropic Coordinates, Null Singularities 84

E Curvature of Szekeres-Iyer Metrics 85

References 87

1 Preface

Introductory Comments

Gravitational plane waves have been discussed in the context of four-dimensional general relativity for a long time (see e.g. [1], and [2, 3] for somewhat more recent accounts). It has also long been recognised [4, 5] that gravitational wave metrics provide potentially exact and exactly solvable string theory backgrounds, and this led to a certain amount of activity in this field in the early 1990s. For a review see e.g. [6].

This in itself, of course, does not explain why I should lecture about this subject in 2004. However, you may have noticed that numerous papers have appeared on the preprint archives in the last couple of years which deal with various aspects of plane waves in string theory. In fact, the discovery of the maximally supersymmetric BFHP [7] plane wave solution of IIB string theory, and the recognition that string theory in this RR background is also exactly solvable [8, 9], have led to renewed interest in this subject, in particular with the realisation that the BFHP solution arises [10, 11] as the Penrose-Gueven limit [12, 13, 14] of $AdS_5 \times S^5$, and that this gives rise to a novel explicit form of the AdS/CFT correspondence [11], the remarkable BMN gauge theory / string theory correspondence. Since then, 500+ papers have appeared on these subjects, mainly in connection with the BMN correspondence, but also dealing with other aspects of plane waves and Penrose limits.

The bad news is that I will not be talking about any of these exciting developments. In particular, supersymmetry and supergravity, string theory and the AdS/CFT correspondence, will make no appearance in the following, even though they are of course the main reasons for the interest in this subject.

Having said this, you may wonder what, then, I will be talking about. Much of the recent literature on plane waves focusses on "advanced" properties of certain very special plane wave metrics (and then things very quickly become quite complicated). Here, rather than focussing on specific examples or very special classes of plane waves, in an attempt to keep things elementary while nevertheless being able to say something of substance, I will instead tell you about some basic properties of plane waves and Penrose limits in general.

So the good news is that the first part of these lectures, sections 2 to 4, and parts of section 5, will be quite elementary and, provided that you have had some introductory course on general relativity, essentially self-contained. They provide an introduction to plane waves and Penrose Limits. I hope that this will serve the purpose of filling a

gap that, I believe, exists between what one usually learns in a general relativity course and what would be good to know when reading about (or working on) more recent developments in this field.

The final part of these notes, parts of section 5 and all of section 6, deals more specifically with a subject I have been working on more recently, namely geometric and general relativity aspects of Penrose Limits, specifically the plane waves one obtains as the Penrose limits of metrics with (black hole or cosmological) singularities. The main results there are a covariant characterisation of the Penrose Limit (in terms of null geodesic deviation) and the discovery of a universal behaviour of Penrose Limits near space-time singularities.

Instead of giving you a detailed summary of these lecture notes here, I refer you to the table of contents.

Further Reading

Due to the huge number of papers that have appeared on this subject in recent years, and since these notes are not meant to be a comprehensive review of the activities in this field but rather an introduction to the subject, I have not even attempted to provide complete references and have cited essentially only those articles that I have actually used in preparing these notes. The best way to track down further references is to look at the citations of, and references in, an article of interest.

Fortunately the BMN gauge theory aspects of the plane wave and Penrose limit story are reviewed in some detail in [15] to which I refer you for ample references to that part of the literature.

However, even within the limited context of geometric and general relativity aspects of plane waves and Penrose limits these notes are incomplete in that no mention is made of global properties of plane wave (or more general pp-wave) metrics. This is an interesting subject, not just in itself, but also for a better understanding of issues like "holography" in plane wave backgrounds. Given a bit more time, it would have been natural to include at least some apsects of these issues in these lectures. But as it is, I am pretty certain that I will already have run out of time by the time we discuss the Penrose limit of the Schwarzschild metric or some other elementary subject. Therefore I will just refer you to the articles [16]-[21] for more information. Some aspects of plane waves are also treated in the mathematical literature on Lorentzian Differential Geometry, see e.g. the

2nd edition of [22].

Bibliographical Acknowledgements

The introductory sections 2.2-2.5 contain reasonably standard material that can be found in many places including some textbooks. It is in any case easier to derive these results oneself from scratch rather than to look them up. Section 2.6 is based on an article by Schmidt [23] and the observations in section 2.7 go back (at least) to [5].

For the rest I have mainly borrowed liberally and shamelessly from articles I have coauthored. Sections 2.8 and 3 follow closely the discussion in [26], with the exception of section 3.4 which is based on a remark in [1]. The idea to use the Hamilton-Jacobi function to construct adapted coordinates I owe to [24] but the discussion here follows the Appendix of [25]. Sections 4.2-4.6 are taken (with minor modifications) from [14] and [25], and sections 5 and 6 as well as the technical appendices are taken more or less literally from [27, 25].

Request added December 2024:

Various recent papers make use of the covariant characterisation of the Penrose Limit described in section 5. These results were first obtained in references [27], [25]:

- M. Blau, M. Borunda, M. O'Loughlin, G. Papadopoulos, *Penrose Limits and Spacetime Singularities*, Class. Quant. Grav. 21 (2004) L43–L49, `hep-th/0312029`.
- M. Blau, M. Borunda, M. O'Loughlin, G. Papadopoulos, *The universality of Penrose limits near space-time singularities*, JHEP 0407 (2004) 068, `hep-th/0403252`

If you do make use of these results, please do not just refer to these lecture notes but give credit to my collaborators by referring to these original papers.

Thank You!

---

2 Plane Waves I: Metrics, Geodesics and Curvature

2.1 Plane Waves in Rosen Coordinates: Heuristics

Usually gravitational plane wave solutions of general relativity are discussed in the context of the linearised theory. There one makes the ansatz that the metric takes the form

$$g_{\mu\nu} = \eta_{\mu\nu} + h_{\mu\nu} \tag{2.1}$$

where $h_{\mu\nu}$ is treated as a small perturbation of the Minkowski background metric. To linear order in $h_{\mu\nu}$ the Einstein equations (necessarily) reduce to a wave equation. One finds that gravitational waves are transversally polarised. For example, a wave travelling in the (t, z)-direction distorts the metric only in the transverse directions, and a typical solution of the linearised Einstein equations is

$$ds^2 = -dt^2 + dz^2 + (\delta_{ij} + h_{ij}(z-t))dy^i dy^j \quad . \tag{2.2}$$

Note that in terms of light-cone coordinates $U = z-t$, $V = (z+t)/2$ this can be written as

$$ds^2 = 2dUdV + (\delta_{ij} + h_{ij}(U))dy^i dy^j \quad . \tag{2.3}$$

We will now simply define a plane wave metric in general relativity to be a metric of the above form, dropping the assumption that h_{ij} be "small",

$$d\bar{s}^2 = 2dUdV + \bar{g}_{ij}(U)dy^i dy^j \quad . \tag{2.4}$$

We will say that this is a plane wave metric in *Rosen coordinates*. This is not the coordinate system in which plane waves are usually discussed, among other reasons because typically in Rosen coordinates the metric exhibits spurious coordinate singularities.[1] We will establish the relation to the more common and much more useful *Brinkmann coordinates* in sections 2.8 and 2.9.

Plane wave metrics are characterised by a single matrix-valued function of U, but two metrics with quite different $\bar{g}_{ij}$ may well be isometric. For example,

$$d\bar{s}^2 = 2dUdV + U^2 d\bar{y}^2 \tag{2.5}$$

is isometric to the flat Minkowski metric whose natural presentation in Rosen coordinates is simply the Minkowski metric in light-cone coordinates,

$$d\bar{s}^2 = 2dUdV + d\bar{y}^2 \quad . \tag{2.6}$$

[1] This led to the mistaken belief in the past that there are no non-singular plane wave solutions of the non-linear Einstein equations.

This is not too difficult to see, and we will establish this as a consequence of a more general result in section 2.8 (but if you want to try this now, try scaling $\vec{y}$ by U and do something to V ...).

That (2.5) is indeed flat should in any case not be too surprising. It is the "null" counterpart of the "spacelike" fact that $ds^2 = dr^2 + r^2 d\Omega^2$, with $d\Omega^2$ the unit line element on the sphere, is just the flat Euclidean metric in polar coordinates, and the "timelike" statement that

$$ds^2 = -dt^2 + t^2 d\tilde{\Omega}^2 \ , \tag{2.7}$$

with $d\tilde{\Omega}^2$ the unit line element on the hyperboloid, is just (a wedge of) the flat Minkowski metric. In cosmology this is known as the *Milne Universe*.[2]

It is somewhat less obvious, but still true, that for example the two metrics

$$\begin{aligned} d\bar{s}^2 &= 2dUdV + \sinh^2 U d\vec{y}^2 \\ d\bar{s}^2 &= 2dUdV + \mathrm{e}^{2U} d\vec{y}^2 \end{aligned} \tag{2.8}$$

are also isometric.

2.2 From pp-waves to plane waves in Brinkmann coordinates

In the remainder of this section we will study gravitational plane waves in a more systematic way. One of the characteristic features of the above plane wave metrics is the existence of a nowhere vanishing covariantly constant null vector field, namely ∂_V. We thus begin by deriving the general metric (line element) for a space-time admitting such a covariantly constant null vector field.

Thus, let Z be a parallel (i.e. covariantly constant) null vector of the $(d+2)$-dimensional Lorentzian metric $g_{\mu\nu}$, $\nabla_\mu Z^\nu = 0$. This condition is equivalent to the pair of conditions

$$\nabla_\mu Z_\nu + \nabla_\nu Z_\mu = 0 \tag{2.9}$$

$$\nabla_\mu Z_\nu - \nabla_\nu Z_\mu = 0 \ . \tag{2.10}$$

The first of these says that Z is a Killing vector field, and the second that Z is also a gradient vector field. If Z is nowhere zero, without loss of generality we can assume that

$$Z = \partial_v \tag{2.11}$$

[2]It is easy to check that this is indeed a (rather trivial) solution of the Friedmann equations (5.66) of Friedmann-Robertson-Walker (FRW) cosmology with $k = -1$, $a(t) = t$ and $\rho = P = 0$.

for some coordinate v since this simply means that we are using a parameter along the integral curves of Z as our coordinate v. In terms of components this means that $Z^\mu = \delta^\mu_v$, or

$$Z_\mu = g_{\mu v} \ . \tag{2.12}$$

The fact that Z is null means that

$$Z_v = g_{vv} = 0 \ . \tag{2.13}$$

The Killing equation now implies that all the components of the metric are v-independent,

$$\partial_v g_{\mu\nu} = 0 \ . \tag{2.14}$$

The second condition (2.10) is identical to

$$\nabla_\mu Z_\nu - \nabla_\nu Z_\mu = 0 \quad \Leftrightarrow \quad \partial_\mu Z_\nu - \partial_\nu Z_\mu = 0 \ , \tag{2.15}$$

which implies that locally we can find a function $u = u(x^\mu)$ such that

$$Z_\mu = g_{v\mu} = \partial_\mu u \ . \tag{2.16}$$

There are no further constraints, and thus the general form of a metric admitting a parallel null vector is, changing from the x^μ-coordinates to $\{u, v, x^a\}$, $a = 1, \ldots, d$,

$$\begin{aligned} ds^2 &= g_{\mu\nu} dx^\mu dx^\nu \\ &= 2dudv + g_{uu}(u, x^c) du^2 + 2g_{au}(u, x^c) dx^a du + g_{ab}(u, x^c) dx^a dx^b \\ &\equiv 2dudv + K(u, x^c) du^2 + 2A_a(u, x^c) dx^a du + g_{ab}(u, x^c) dx^a dx^b \ . \end{aligned} \tag{2.17}$$

Note that if we had considered a metric with a covariantly constant timelike or spacelike vector, then we would have obtained the above metric with an additional term of the form $\mp dv^2$. In that case, the cross-term $2dudv$ could have been eliminated by shifting $v \to v' = v \mp u$, and the metric would have factorised into $\mp dv'^2$ plus a v'-independent metric. Such a factorisation does in general not occur for a covariantly constant null vector, which makes metrics with such a vector potentially more interesting than their timelike or spacelike counterparts.

There are still residual coordinate transformations which leave the above form of the metric invariant. For example, both K and A_a can be eliminated in favour of g_{ab}. We will not pursue this here, as we are primarily interested in a special class of metrics which are characterised by the fact that $g_{ab} = \delta_{ab}$,

$$ds^2 = 2dudv + K(u, x^b) du^2 + 2A_a(u, x^b) dx^a du + d\vec{x}^2 \ . \tag{2.18}$$

Such metrics are called *plane-fronted waves with parallel rays*, or *pp-waves* for short. "plane-fronted" refers to the fact that the wave fronts $u = const.$ are planar (flat),

and "parallel rays" refers to the existence of a parallel null vector. Once again, there are residual coordinate transformations which leave this form of the metric invariant. Among them are shifts of v, $v \to v + \Lambda(u, x^a)$, under which the coefficients K and A_a transform as

$$\begin{aligned} K &\to K + \tfrac{1}{2}\partial_u \Lambda \\ A_a &\to A_a + \partial_a \Lambda \ . \end{aligned} \tag{2.19}$$

Note in particular the "gauge transformation" of the (Kaluza-Klein) gauge field A_a, here associated with the null isometry generated by $Z = \partial_v$.

Plane waves are a very special kind of pp-waves. By definition, a plane wave metric is a pp-wave with $A_a = 0$ and $K(u, x^a)$ quadratic in the x^a (zero'th and first order terms in x^a can be eliminated by a coordinate transformation),

$$d\bar{s}^2 = 2dudv + A_{ab}(u)x^a x^b du^2 + d\vec{x}^2 \ . \tag{2.20}$$

We will say that this is the metric of a plane wave in *Brinkmann coordinates*. The relation between the expressions for a plane wave in Brinkmann coordinates and Rosen coordinates will be explained in section 2.8. From now on barred quantities will refer to plane wave metrics.[3]

There are various ways of motivating this specialisation, most of them not particularly relevant for our purposes. Certainly these plane wave metrics are not (and were never meant to be) phenomenologically realistic models of gravitational plane waves, but rather a useful theoretical play-ground. The reason for this is that in the far-field gravitational waves are so weak that the linearised Einstein equations and their solutions are adequate to describe the physics, whereas the near-field strong gravitational effects responsible for the production of gravitational waves, for which the linearised equations are indeed insufficient, correspond to much more complicated solutions of the Einstein equations (describing e.g. two very massive stars orbiting around their common center of mass).

We are primarily interested in plane waves because they arise as particular limits of any space-time (Penrose limits - see sections 4 and 5) and, looking further ahead, because the string mode equations can be reduced to linear differential equations in that case.

It is occasionally useful to work in a frame basis

$$E^A = E^A_\mu(x) dx^\mu \tag{2.21}$$

rather than a coordinate basis. If in such a basis the metric takes the form

$$ds^2 = g_{\mu\nu} dx^\mu dx^\nu = 2E^+E^- + \delta_{ab} E^a E^b \ , \tag{2.22}$$

[3] But I cannot guarantee that I have done this consistently throughout these notes.

we will call $E^A = (E^+, E^-, E^a)$ a *pseudo-orthonormal frame* for the metric $g_{\mu\nu}$. In particular, for a plane wave metric in Brinkmann coordinates one can evidently choose

$$\begin{aligned} \bar{E}^+ &= du \\ \bar{E}^- &= dv + \tfrac{1}{2} A_{ab}(u) x^a x^b du \\ \bar{E}^a &= dx^a \ . \end{aligned} \tag{2.23}$$

We will see another natural choice in section 2.3.

In any case, in Brinkmann coordinates a plane wave metric is characterised by a single symmetric matrix-valued function $A_{ab}(u)$. Generically there is very little redundancy in the description of plane waves in Brinkmann coordinates, i.e. there are very few residual coordinate transformations that leave the form of the metric invariant, and the metric is specified almost uniquely by $A_{ab}(u)$. In particular, as we will see below, a plane wave metric is flat if and only if $A_{ab}(u) = 0$ identically. Contrast this with the non-uniqueness of the flat metric in Rosen coordinates. This uniqueness of the Brinkmann coordinates is one of the features that makes them convenient to work with in concrete applications.

2.3 Geodesics, Light-Cone Gauge and Harmonic Oscillators

We now take a look at geodesics of a plane wave metric in Brinkmann coordinates,

$$d\bar{s}^2 = 2dudv + A_{ab}(u) x^a x^b du^2 + d\vec{x}^2 \ , \tag{2.24}$$

i.e. the solutions $x^\mu(\tau)$ to the geodesic equations

$$\ddot{x}^\mu(\tau) + \bar{\Gamma}^\mu_{\ \nu\lambda}(x(\tau)) \dot{x}^\nu(\tau) \dot{x}^\lambda(\tau) = 0 \ , \tag{2.25}$$

where an overdot denotes a derivative with respect to the affine parameter τ.

Rather than determining the geodesic equations by first calculating all the non-zero Christoffel symbols, we make use of the fact that the geodesic equations can be obtained more efficiently, and in a way that allows us to directly make use of the symmetries of the problem, as the Euler-Lagrange equations of the Lagrangian

$$\begin{aligned} \mathcal{L} &= \tfrac{1}{2} \bar{g}_{\mu\nu} \dot{x}^\mu \dot{x}^\nu \\ &= \dot{u}\dot{v} + \tfrac{1}{2} A_{ab}(u) x^a x^b \dot{u}^2 + \tfrac{1}{2} \dot{\vec{x}}^2 \ , \end{aligned} \tag{2.26}$$

supplemented by the constraint

$$2\mathcal{L} = \epsilon \ , \tag{2.27}$$

where $\epsilon = 0$ ($\epsilon = -1$) for massless (massive) particles.

Since nothing depends on v, the *light-cone momentum*

$$p_v = \frac{\partial \mathcal{L}}{\partial \dot{v}} = \dot{u} \tag{2.28}$$

is conserved. For $p_v = 0$ the particle obviously does not feel the curvature and the geodesics are straight lines. When $p_v \neq 0$, we choose the *light-cone gauge*

$$u = p_v \tau \ . \tag{2.29}$$

Then the geodesic equations for the transverse coordinates are the Euler-Lagrange equations

$$\ddot{x}^a(\tau) = A_{ab}(p_v \tau) x^b(\tau) p_v^2 \tag{2.30}$$

These are the equation of motion of a non-relativistic *harmonic oscillator*,

$$\ddot{x}^a(\tau) = -\omega_{ab}^2(\tau) x^b(\tau) \tag{2.31}$$

with (possibly time-dependent) frequency matrix

$$\omega_{ab}^2(\tau) = -p_v^2 A_{ab}(p_v \tau) \ , \tag{2.32}$$

The constraint

$$p_v \dot{v}(\tau) + \tfrac{1}{2} A_{ab}(p_v \tau) x^a(\tau) x^b(\tau) p_v^2 + \tfrac{1}{2} \dot{x}^a(\tau) \dot{x}^a(\tau) = 0 \tag{2.33}$$

for null geodesics (the case $\epsilon \neq 0$ can be dealt with in the same way) implies, and thus provides a first integral for, the v-equation of motion. Multiplying the oscillator equation by x^a and inserting this into the constraint, one finds that this can be further integrated to

$$p_v v(\tau) = -\tfrac{1}{2} x^a(\tau) \dot{x}^a(\tau) + p_v v_0 \ . \tag{2.34}$$

Note that a particular solution of the null geodesic equation is the purely "longitudinal" null geodesic

$$x^\mu(\tau) = (u = p_v \tau, v = v_0, x^a = 0) \ . \tag{2.35}$$

Along this null geodesic, all the Christoffel symbols of the metric (in Brinkmann coordinates) are zero. Hence Brinkmann coordinates can be regarded as a special case of *Fermi coordinates* (defined in general by the vanishing of the Christoffel symbols along a given, not necessarily geodesic, curve).[4]

By definition the light-cone Hamiltonian is

$$H_{lc} = -p_u \ , \tag{2.36}$$

[4]Fermi coordinates for *timelike* geodesics are discussed e.g. in [28, 29].

where p_u is the momentum conjugate to u in the gauge $u = p_v\tau$. With the above normalisation of the Lagrangian one has

$$\begin{aligned} p_u &= \bar{g}_{u\mu}\dot{x}^\mu = \dot{v} + A_{ab}(p_v\tau)x^a x^b p_v \\ &= -p_v^{-1}H_{ho}(\tau) \ , \end{aligned} \tag{2.37}$$

where $H_{ho}(\tau)$ is the (possibly time-dependent) harmonic oscillator Hamiltonian

$$H_{ho}(\tau) = \tfrac{1}{2}(\dot{x}^a\dot{x}^a - p_v^2 A_{ab}(p_v\tau)x^a x^b) \ . \tag{2.38}$$

Thus for the light-cone Hamiltonian one has

$$H_{lc} = \tfrac{1}{p_v}H_{ho} \ . \tag{2.39}$$

In summary, we note that in the light-cone gauge the equation of motion for a relativistic particle becomes that of a non-relativistic harmonic oscillator. This harmonic oscillator equation appears in various different contexts when discussing plane waves, and will therefore also reappear several times later on in these notes.

Given any particular solution $x^\mu(\tau)$ to the geodesic equations, one can construct a parallel propagated pseudo-orthonormal frame along that geodesic, i.e. a pseudo-orthonormal frame $\bar{E}^A$ (2.22) for all $x^\mu(\tau)$ which has the property that it is parallel (covariantly constant) along that geodesic,

$$\dot{x}^\mu\nabla_\mu\bar{E}^A_\nu = 0 \ . \tag{2.40}$$

For a null geodesic, one can choose one leg of the dual coframe, say $\bar{E}_+$, to be tangent to the null geodesic,

$$\bar{E}_+ = \dot{x}^\mu\partial_\mu \ , \tag{2.41}$$

since

$$\dot{x}^\nu\nabla_\nu\bar{E}^\mu_+ = \dot{x}^\nu\nabla_\nu\dot{x}^\mu = 0 \tag{2.42}$$

is just the geodesic equation. This extends to a parallel coframe $\bar{E}_A = E^\mu_A\partial_\mu$ as

$$\begin{aligned} \bar{E}_+ &= p_v\partial_u + \dot{v}\partial_v + \dot{x}^a\partial_a \\ \bar{E}_- &= p_v^{-1}\partial_v \\ \bar{E}_a &= \partial_a - p_v^{-1}\dot{x}^a\partial_v \ . \end{aligned} \tag{2.43}$$

The dual frame $\bar{E}^A$ is

$$\begin{aligned} \bar{E}^+ &= p_v^{-1}du \\ \bar{E}^- &= -(\dot{v} + p_v^{-1}\dot{x}^2)du + p_v dv + \dot{x}^a dx^a \\ \bar{E}^a &= dx^a - p_v^{-1}\dot{x}^a du \ . \end{aligned} \tag{2.44}$$

This coincides with the frame (2.23) for the longitudinal geodesic (2.35) and $p_v = 1$. The dual statement to (2.41) is that $\bar{E}^-$ can be written in terms of momenta as

$$\bar{E}^- = p_u du + p_v dv + p_a dx^a = p_\mu dx^\mu \ . \tag{2.45}$$

2.4 String Mode Equations for Plane Waves

The Polyakov action for a string moving in the curved background described by the metric $g_{\mu\nu}$ is

$$S_P(X,h) = \frac{1}{2\pi}\int \sqrt{h} d^2z\, h^{\alpha\beta} g_{\mu\nu}(X)\partial_\alpha X^\mu \partial_\beta X^\nu \ , \tag{2.46}$$

where $X^\mu(\tau,\sigma)$ are the embedding coordinates of the string worldsheet with metric $h_{\alpha\beta}$ into the target space with metric $g_{\mu\nu}$, and the two worldsheet coordinates z^α are $(z^1=\tau, z^2=\sigma)$. The dynamical variables are $h_{\alpha\beta}$ and X^μ.

In the so-called "conformal gauge"

$$\sqrt{h}h^{\alpha\beta} = \eta^{\alpha\beta} \tag{2.47}$$

the equations of motion for the embedding coordinates $X^\mu(\tau,\sigma)$ are

$$(\partial_\tau^2 - \partial_\sigma^2)X^\mu + \Gamma^\mu_{\ \nu\lambda}(X)(\partial_\tau X^\nu \partial_\tau X^\lambda - \partial_\sigma X^\nu \partial_\sigma X^\lambda) = 0 \ , \tag{2.48}$$

These equations need to be supplemented by the equations of motion for the two-dimensional worldsheet metric, i.e. by the condition that the two-dimensional energy-momentum tensor be zero,

$$T_{\alpha\beta} = \frac{\delta S_p}{\delta h^{\alpha\beta}} = 0 \ . \tag{2.49}$$

Since the action is conformally invariant, i.e. invariant under the local rescalings

$$h_{\alpha\beta}(x) \to \mathrm{e}^{2\phi(x)} h_{\alpha\beta}(x) \tag{2.50}$$

of the worldsheet metric, this energy-momentum tensor is automatically traceless,

$$T^\alpha_{\ \alpha} \equiv h^{\alpha\beta}T_{\alpha\beta} = 0 \tag{2.51}$$

and thus there are only two independent conditions, namely

$$g_{\mu\nu}(X)(\partial_\tau X^\mu \partial_\tau X^\nu + \partial_\sigma X^\mu \partial_\sigma X^\nu) = 0 \ , \tag{2.52}$$

(the Hamiltonian constraint) and

$$g_{\mu\nu}(X)\partial_\tau X^\mu \partial_\sigma X^\nu = 0 \tag{2.53}$$

(the σ-reparametrisation constraint).

In general, these three equations are highly non-linear coupled differential equations for the embedding fields $X(\sigma,\tau)$, and thus this is usually not the optimal starting point for a discussion of quantisation of strings beyond a perturbative expansion.

For plane wave metrics, however, with embedding coordinates $X^\mu = (U, V, X^a)$, these equations simplify quite dramatically. In particular, the string mode equations for $U(\sigma, \tau)$ read

$$(\partial_\tau^2 - \partial_\sigma^2)U(\sigma, \tau) = 0 \ , \tag{2.54}$$

and, as in the particle case, one can choose the light-cone gauge[5]

$$U(\sigma, \tau) = p_v \tau \ . \tag{2.55}$$

The transverse string mode equations are then the *linear* equations

$$(\partial_\tau^2 - \partial_\sigma^2)X^a(\sigma, \tau) = p_v^2 A_{ab}(p_v\tau)X^b(\sigma, \tau) \tag{2.56}$$

In particular, if one expands $X(\tau, \sigma)$ in Fourier modes,

$$X^a(\tau, \sigma) = \sum_n X_n^a(\tau) \mathrm{e}^{in\sigma} \ , \tag{2.57}$$

then one obtains decoupled harmonic oscillator equations for the individual modes which generalise (2.30), namely

$$\ddot{X}_n^a = (p_v^2 A_{ab}(p_v\tau) - n^2\delta_{ab})X_n^b \tag{2.58}$$

Finally, the mode equation for $V(\sigma, \tau)$ is more complicated but, as in the particle case, can be substituted by the constraints which can be written as

$$\begin{aligned} p_v\partial_\sigma V &= -\partial_\tau X^a \partial_\sigma X^a \\ p_v\partial_\tau V &= -\partial_\sigma X^a \partial_\sigma X^a + \tfrac{1}{2}\eta^{\alpha\beta}\partial_\alpha(X^a\partial_\beta X^a) \ . \end{aligned} \tag{2.59}$$

The first constraint can be integrated to

$$p_v V = -\int^\sigma \partial_\tau X^a \partial_\sigma X^a + V_0(\tau) \tag{2.60}$$

and this solves the second constraint (and the string mode equation) provided that $V_0(\tau) \sim v(\tau)$,

$$p_v V(\sigma, \tau) = p_v v(\tau) - \int^\sigma \partial_\tau X^a \partial_\sigma X^a \tag{2.61}$$

One can thus quite explicitly expand all the modes in terms of a complete set of solutions to the classical equations of motion and then take these mode expansions as a starting point for the canonical quantisation of strings in the light-cone gauge.

[5] One susually prefers to write this as $U = 2\alpha' p_v \tau$, α' the string tension, but for present purposes it is good enough to set $\alpha' = 1/2$.

It is easy to see that there is essentially only one non-vanishing component of the Riemann curvature tensor of a plane wave metric, namely

$$\bar{R}_{uaub} = -A_{ab} \ . \tag{2.62}$$

In particular, therefore, because of the null (or chiral) structure of the metric, there is only one non-trivial component of the Ricci tensor,

$$\bar{R}_{uu} = -\delta^{ab} A_{ab} \equiv -\operatorname{Tr} A \ , \tag{2.63}$$

the Ricci scalar is zero,

$$\bar{R} = 0 \ , \tag{2.64}$$

and the only non-zero component of the Einstein tensor (A.13) is

$$\bar{G}_{uu} = \bar{R}_{uu} \ . \tag{2.65}$$

Thus, as claimed above, the metric is flat iff $A_{ab} = 0$. Moreover, we see that in Brinkmann coordinates the vacuum Einstein equations reduce to a simple algebraic condition on A_{ab} (regardless of its u-dependence), namely that it be traceless.

A simple example of a vacuum plane wave metric in four dimensions is

$$d\bar{s}^2 = 2dudv + (x^2 - y^2)du^2 + dx^2 + dy^2 \ , \tag{2.66}$$

or, more generally,

$$d\bar{s}^2 = 2dudv + [A(u)(x^2 - y^2) + 2B(u)xy]du^2 + dx^2 + dy^2 \tag{2.67}$$

for arbitrary fuctions $A(u)$ and $B(u)$. This reflects the two polarisation states or degrees of freedom of a four-dimensional graviton. Evidently, this generalises to arbitrary dimensions: the number of degrees of freedom of the traceless matrix $A_{ab}(u)$ correspond precisely to those of a transverse traceless symmetric tensor (a.k.a. a graviton).

The Weyl tensor is the traceless part of the Riemann tensor,

$$\bar{C}_{uaub} = -(A_{ab} - \frac{1}{d}\delta_{ab} \operatorname{Tr} A) \ . \tag{2.68}$$

Thus the Weyl tensor vanishes (and, for $d > 1$, the plane wave metric is conformally flat) iff A_{ab} is pure trace,

$$A_{ab}(u) = A(u)\delta_{ab} \ . \tag{2.69}$$

For $d = 1$, every plane wave is conformally flat, as is most readily seen in Rosen coordinates.

When the Ricci tensor is non-zero (A_{ab} has non-vanishing trace), then plane waves solve the Einstein equations with null matter or null fluxes, i.e. with an energy-momentum tensor $\bar{T}_{\mu\nu}$ whose only non-vanishing component is $\bar{T}_{uu}$,

$$\bar{T}_{\mu\nu} = \rho(u)\delta_{\mu u}\delta_{\nu u} \quad . \tag{2.70}$$

Examples are e.g. null Maxwell fields $a(u)$ with field strength

$$F = du \wedge a'(u) \tag{2.71}$$

or their higher-rank generalisations (which appear in supergavity). Physical matter (with positive energy density) corresponds to $\bar{R}_{uu} > 0$ or $\mathrm{Tr}\, A < 0$.

2.6 Curvature Invariants of Plane Waves (are zero)

It is pretty obvious by inspection that all the curvature invariants of a plane wave vanish (there is simply no way to soak up the u-indices). Here is another argument, due to Schmidt [23], which provides a different perspective on this result and does not require one to actually calculate the curvature tensor.

The argument proceeds in three steps:

1. First of all, one shows that a non-trivial (elementary) curvature invariant cannot be invariant under constant rescalings of the metric.

2. Then one establishes that if there is a coordinate transformation (motion) which induces a non-trivial constant rescaling of the metric (a *homothety*), as a consequence of the first result all elementary curvature invariants vanish at the fixed points of this motion.

3. Finally, to apply this to plane waves, one shows that for any point x in a plane wave space-time there exists a homothety with fixed-point x.

A general curvature invariant (a scalar constructed from the metric and the Riemann tensor and its covariant derivatives) is a function of the elementary curvature invariants which are obtained by multiplying together products of covariant derivatives

$$\nabla_{\mu_1} \ldots \nabla_{\mu_p} R^{\mu}{}_{\nu\lambda\rho}$$

with an appropriate number of factors of the inverse metric to construct a scalar. Now consider the behaviour of any such elementary invariant under constant rescalings of the metric. Since the Christoffel symbols are invariant under such a scaling, so is the

Riemann tensor with index structure $R^{\mu}{}_{\nu\lambda\rho}$ and the Ricci tensor, as well as all their covariant derivatives. But since factors of the inverse metric are required to construct a scalar, it follows that non-trivial elementary curvature invariants transform non-trivially under constant rescalings of the metric. This establishes (1).

It now follows that if there is a homothety of a metric which is not an isometry, then all curvature invariants have to vanish at the fixed points of this coordinate transformation. The reason for this is that, on the one hand, as it is a scalar under coordinate transformations, the curvature invariant should be invariant (as the name implies). On the other hand, since this coordinate transformation induces a constant scaling of the metric, the curvature invariant cannot be invariant under this transformation unless it is zero. This establishes (2).

Thus, to establish the vanishing of the curvature invariants for plane waves, we have to show that for every point x there exists a non-trivial homothety of the plane wave spacetime with fixed point x. This is easy to establish. For example, in Rosen coordinates there is an obvious translation symmetry in V and y^k, so without loss of generality we can assume that x is the point $(U, 0, 0)$. Now consider the scaling

$$(U, V, y^k) \to (U, \lambda^2 V, \lambda y^k) \ . \tag{2.72}$$

It is evident that $(U, 0, 0)$ is a fixed pont of this transformation and that under this rescaling the metric transforms as

$$ds^2 \to \lambda^2 ds^2 \ . \tag{2.73}$$

This establishes that all curvature invariants of a plane wave metric are identically zero at the points $(U, 0, 0)$ and hence, because of translation invariance, everywhere.

2.7 Singularities of Plane Waves (nevertheless exist)

Usually, an unambiguous way to ascertain that an apparent singularity of a metric is a true curvature singularity rather than just a singularity in the choice of coordinates is to exhibit a curvature invariant that is singular at that point. For example, for the Schwarzschild metric (4.36) one has

$$R_{\mu\nu\rho\sigma} R^{\mu\nu\rho\sigma} \sim \frac{m^2}{r^6} \ , \tag{2.74}$$

which shows that the singularity at $r = 0$ is a true singularity.

Now for plane waves all curvature invariants are zero. Does this mean that plane waves are non-singular? Or, if not, how does one detect the presence of a curvature singularity?

One way of doing this is to study the tidal forces acting on extended objects or families of freely falling particles. Indeed, in a certain sense the main effect of curvature (or gravity) is that initially parallel trajectories of freely falling non-interacting particles (dust, pebbles,...) do not remain parallel, i.e. that gravity has the tendency to focus (or defocus) matter. This statement find its mathematically precise formulation in the geodesic deviation equation (A.15),

$$\frac{D^2}{D\tau^2}\delta x^\mu = R^\mu{}_{\nu\lambda\rho}\dot{x}^\nu\dot{x}^\lambda\delta x^\rho \quad . \tag{2.75}$$

Here δx^μ is the seperation vector between nearby geodesics. We can apply this equation to some family of geodesics of plane waves discussed in section 2.3. We will choose δx^μ to connect points on nearby geodesics with the same value of $\tau = u$. Thus $\delta u = 0$, and the geodesic deviation equation for the transverse seperations δx^a reduces to

$$\frac{d^2}{du^2}\delta x^a = -\bar{R}^a{}_{ubu}\delta x^b = A_{ab}\delta x^b \quad . \tag{2.76}$$

This is (once again!) the harmonic oscillator equation. We could have also obtained this directly by varying the harmonic oscillator (geodesic) equation for x^a, using $\delta u = 0$. We see that for negative eigenvalues of A_{ab} (physical matter) this tidal force is attractive, leading to a focussing of the geodesics. For vacuum plane waves, on the other hand, the tidal force is attractive in some directions and repulsive in the other (reflecting the quadrupole nature of gravitational waves).

What is of interest to us here is the fact that the above equation shows that A_{ab} itself contains direct physical information. In particular, these tidal forces become infinite where $A_{ab}(u)$ diverges. This is a true physical effect and hence the plane wave space-time is genuinely singular at such points.

Let us assume that such a singularity occurs at $u = u_0$. Since $u = p_v\tau$ is an affine parameter along the geodesic, this shows that any geodesic starting off at a finite value u_1 of u will reach the singularity in the finite "time" $u_0 - u_1$. Thus the space-time is geodesically incomplete and ends at $u = u_0$.

Since, on the other hand, the plane wave metric is clearly smooth for non-singular $A_{ab}(u)$, we can thus summarise this discussion by the statement that a plane wave is singular if and only if $A_{ab}(u)$ is singular somewhere.

2.8 From Rosen to Brinkmann coordinates (and back)

I still owe you an explanation of what the heuristic considerations of section 2.1 have to do with the rest of this section. To that end I will now describe the relation between

the plane wave metric in Brinkmann coordinates,

$$d\bar{s}^2 = 2dudv + A_{ab}(u)x^a x^b du^2 + d\vec{x}^2 \ , \tag{2.77}$$

and in Rosen coordinates,

$$d\bar{s}^2 = 2dUdV + \bar{g}_{ij}(U)dy^i dy^j \ . \tag{2.78}$$

It is clear that, in order to transform the non-flat transverse metric in Rosen coordinates to the flat transverse metric in Brinkmann coordinates, one should change variables as

$$x^a = \bar{E}^a_{\ i}(U)y^i \ , \tag{2.79}$$

where $\bar{E}^a_{\ i}(U)$ is a vielbein for $\bar{g}_{ij}$ in the sense that

$$\bar{g}_{ij}(U) = \bar{E}^a_{\ i}(U)\bar{E}^b_{\ j}(U)\delta_{ab} \ . \tag{2.80}$$

Denoting the U-derivative by an overdot, $\dot{\bar{E}}^a_{\ i}$, and the inverse vielbein by $\bar{E}^i_{\ a}$, one has

$$\bar{g}_{ij}dy^i dy^j = (dx^a - \dot{\bar{E}}^a_{\ i}\bar{E}^i_{\ c}x^c dU)(dx^b - \dot{\bar{E}}^b_{\ j}\bar{E}^j_{\ d}x^d dU)\delta_{ab} \ . \tag{2.81}$$

This generates the flat transverse metric as well as dU^2-term quadratic in the x^a, as desired, but there are also unwanted $dUdx^a$ cross-terms. Provided that the (a priori non-unique) vielbein $\bar{E}$ satisfies the symmetry condition

$$\dot{\bar{E}}_{ai}\bar{E}^i_{\ b} = \dot{\bar{E}}_{bi}\bar{E}^i_{\ a} \tag{2.82}$$

(such an $\bar{E}$ can always be found and is then unique up to U-independent orthogonal transformations [14]), these terms can be cancelled by a shift in V,

$$V \to V - \tfrac{1}{2}\dot{\bar{E}}_{ai}\bar{E}^i_{\ b}x^a x^b \ . \tag{2.83}$$

Apart from eliminating the $dUdx^a$-terms, this shift will also have the effect of generating other dU^2-terms. Thanks to the symmetry condition, the term quadratic in first derivatives of $\bar{E}$ cancels that arising from $\bar{g}_{ij}dy^i dy^j$, and only a second-derivative part remains. The upshot of this is that after the change of variables

$$\begin{aligned} U &= u \\ V &= v + \tfrac{1}{2}\dot{\bar{E}}_{ai}\bar{E}^i_{\ b}x^a x^b \\ y^i &= \bar{E}^i_{\ a}x^a \ , \end{aligned} \tag{2.84}$$

the metric (2.78) takes the Brinkmann form (2.77), with

$$A_{ab} = \ddot{\bar{E}}_{ai}\bar{E}^i_{\ b} \ . \tag{2.85}$$

This can also be written as the *harmonic oscillator equation*

$$\ddot{\bar{E}}_{ai} = A_{ab}\bar{E}_{bi} \tag{2.86}$$

we had already encountered in the context of the geodesic equation.

Note that from this point of view the Rosen coordinates are labelled by d out of $2d$ linearly independent solutions of the oscillator equation, and the symmetry condition can now be read as the constraint that the *Wronskian* among these solutions be zero. Thus, given the metric in Brinkmann coordinates, one can construct the metric in Rosen coordinates by solving the oscillator equation, choosing a maximally commuting set of solutions to construct $\bar{E}_{ai}$, and then determining $\bar{g}_{ij}$ algebraically from the $\bar{E}_{ai}$.

In practice, once one knows that Rosen and Brinkmann coordinates are indeed just two distinct ways of describing the same class of metrics, one does not need to perform explicitly the coordinate transformation mapping one to the other. All one is interested in is the above relation between $\bar{g}_{ij}(U)$ and $A_{ab}(u)$, which essentially says that A_{ab} is the curvature of $\bar{g}_{ij}$,

$$A_{ab} = -\bar{E}^i{}_a\bar{E}^j{}_b\bar{R}_{UiUj} \ . \tag{2.87}$$

The equations simplify somewhat when the metric $\bar{g}_{ij}(u)$ is diagonal,

$$\bar{g}_{ij}(u) = \bar{e}_i(u)^2\delta_{ij} \ . \tag{2.88}$$

In that case one can choose $\bar{E}^a_i = \bar{e}_i\delta^a_i$. The symmetry condition is automatically satisfied because a diagonal matrix is symmetric, and one finds that A_{ab} is also diagonal,

$$A_{ab} = (\ddot{\bar{e}}_a/\bar{e}_a)\delta_{ab} \ . \tag{2.89}$$

Conversely, therefore, given a diaognal plane wave in Brinkmann coordinates, to obtain the metric in Rosen coordinates one needs to solve the harmonic oscillator equations

$$\ddot{\bar{e}}_i(u) = A_{ii}(u)\bar{e}_i(u) \ . \tag{2.90}$$

Thus the Rosen metric determined by $\bar{g}_{ij}(U)$ is flat iff $\bar{e}_i(u) = a_iU+b_i$ for some constants a_i, b_i. In particular, we recover the fact that the metric (2.5),

$$d\bar{s}^2 = 2dUdV + U^2d\bar{y}^2 \tag{2.91}$$

is flat. We see that the non-uniqueness of the metric in Rosen coordinates is due to the integration 'constants' arising when trying to integrate a curvature tensor to a corresponding metric.

As another example, consider the four-dimensional vacuum plane wave (2.66). Evidently, one way of writing this metric in Rosen coordinates is

$$d\bar{s}^2 = 2dUdV + \sinh^2 U dX^2 + \sin^2 U dY^2 \quad , \tag{2.92}$$

and more generally any plane wave with constant A_{ab} can be chosen to be of this trigonometric form in Rosen coordinates.

2.9 More on Rosen Coordinates

Collecting the results of the previous sections, we can now gain a better understanding of the geometric significance (and shortcomings) of Rosen coordinates for plane waves.

First of all we observe that the metric

$$d\bar{s}^2 = 2dUdV + \bar{g}_{ij}(U)dy^i dy^j \tag{2.93}$$

defines a preferred family (congruence) of null geodesics, namely the integral curves of the null vector field ∂_U, i.e. the curves

$$(U(\tau), V(\tau), y^k(\tau)) = (\tau, V, y^k) \tag{2.94}$$

with affine parameter $\tau = U$ and parametrised by the constant values of the coordinates (V, y^k). In particular, the "origin" $V = y^k = 0$ of this congruence is the longitudinal null geodesic (2.35) with $v_0 = 0$ in Brinkmann coordinates.

In the region of validity of this coordinate system, there is a unique null geodesic of this congruence passing through any point, and one can therefore label (coordinatise) these points by specifying the geodesic (V, y^k) and the affine parameter U along that geodesic, i.e. by Rosen coordinates. As such, Rosen coordinates for plane wave metrics are a special case of *adapted coordinates* or *Penrose coordinates* for general metrics which we will discuss in detail in section 4.

We can now also understand the reasons for the failure of Rosen coordinates: they cease to be well-defined (and give rise to spurious coordinate singularities) e.g. when geodesics in the family (congruence) of null geodesics interesect: in that case there is no longer a unique value of the coordinates (U, V, y^k) that one can associate to that intersection point. This failure can either be inevitable (if the geodesic $V = y^k = 0$, say, contains *conjugate points* - see [40] for a definition and discussion of this important concept), or can simply be due to a bad choice of family of geodesics.

To illustrate this point, consider simply $\mathbb{R}^2$ with its standard metric $ds^2 = dx^2 + dy^2$. An example of a "good" congruence of geodesics is the straight lines parallel to the

x-axis. The corresponding "Rosen" coordinates ("Rosen" in quotes because we are not talking about null geodesics) are simply the globally well-defined Cartesian coordinates, x playing the role of the affine parameter U and y that of the transverse coordinates y^k labelling the geodesics. An example of a "bad" family of godesics is the straight lines through the origin. The corresponding "Rosen" coordinates are essentially just polar coordinates. Away from the origin there is again a unique geodesic passing through any point but, as is well known, this coordinate system breaks down at the origin.

With this in mind, we can now reconsider the "bad" Rosen coordinates

$$d\bar{s}^2 = 2dUdV + U^2 d\vec{y}^2 \tag{2.95}$$

for flat space. As we have seen above, in Brinkmann coordinates the metric is manifestly flat,

$$d\bar{s}^2 = 2dudv + d\vec{x}^2 \quad . \tag{2.96}$$

Using the coordinate transformation (2.84) from Rosen to Brinkmann coordinates, we see that the geodesic lines $y^k = c^k$, $V = c$ of the congruence defined by the metric (2.95) correspond to the lines $x^k = c^k u$ in Brinkmann (Minkowski) coordinates. But these are precisely the straight lines through the origin. This explains the coordinate singularity at $U = 0$ and further strengthens the analogy with polar coordinates mentioned at the end of section 2.1.

More generally, we see from (2.84) that the relation between the Brinkmann coordinates x^a and the Rosen coordinates y^k,

$$x^a = \bar{E}^a_k(U) y^k \quad , \tag{2.97}$$

and hence the expression for the geodesic lines $y^k = c^k$, becomes degenerate when $\bar{E}^a_k$ becomes degenerate, i.e. precisely when $\bar{g}_{ij}$ becomes degenerate. Brinkmann coordinates, on the other hand, provide a global coordinate chart for plane wave metrics.

The (almost) inevitablity of (coordinate) singularities in Rosen coordinates can be seen from the following argument, adapted from [41]. By a standard identity for the variation of a determinant, the Rosen determinant

$$\mathsf{E}(u) = \det(\bar{E}^a_k(u)) \tag{2.98}$$

satisfies

$$\frac{d}{du} \log \mathsf{E} = \mathrm{Tr}(\bar{E}^{-1} \dot{\bar{E}}) \equiv \mathrm{Tr}\, M \tag{2.99}$$

where M_{ab} is the symmetric matrix (2.82)

$$M_{ab} = \dot{\bar{E}}_{ai} \bar{E}^i_{\ b} \quad . \tag{2.100}$$

Differentiating once more, it then follows from the oscillator equation (2.86) that

$$\frac{d^2}{du^2}\log \mathsf{E} = -\operatorname{Tr}(\bar{E}^{-1}\dot{\bar{E}}\bar{E}^{-1}\dot{\bar{E}}) + \operatorname{Tr}(\bar{E}^{-1}\ddot{\bar{E}}) = -\operatorname{Tr}(M^2) + \operatorname{Tr} A \leq \operatorname{Tr} A \tag{2.101}$$

Recalling that $\bar{R}_{uu} = -\operatorname{Tr} A$ (2.63), we thus have

$$\frac{d^2}{du^2}\log \mathsf{E} \leq -\bar{R}_{uu} \tag{2.102}$$

In particular, therefore, if $\bar{R}_{uu} > 0$, then $\log \mathsf{E}(u)$ is strictly concave downwards, and E will at the very least vanish exponentially as $u \to \pm\infty$ (but will typically vanish already at some finite value of u), so that the Rosen coordinate system breaks down there. By (2.70), $\bar{R}_{uu} > 0$ is equivalent to positivity of the lightcone energy density, a very reasonable requirement on the matter content, for plane waves equivalent e.g. to the weak energy condition [40].

As mentioned, the argument here is inspired by an argument given in [41]. There the claim is made that with the positive energy condition one has $\ddot{\mathsf{E}} \leq 0$ (i.e. E is strictly concave), which would allow a slighly stronger conclusion. However, I have been unable to reproduce this result and am grateful for pointers to what I am missing.[6]

2.10 Exercises for Section 2

1. Plane Waves in Rosen and Brinkmann Coordinates

   (a) Find the coordinate transformation that maps (2.5) to the manifestly flat metric (2.6).

   (b) Show that pp-wave metrics with wave profiles at most quadratic in the transverse coordinates x^a,

   $$ds^2 = 2dudv + (A_{ab}(u)x^a x^b + B_a(u)x^a + C(u))du^2 + d\vec{x}^2 \quad , \tag{2.103}$$

   can be reduced to the standard plane wave form (2.20) by a coordinate transformation.

   (c) Verify the coordinate transformation (2.84) from Rosen to Brinkmann coordinates.

   (d) Calculate the non-vanishing components of the Riemann curvature tensor of a plane wave in Rosen coordinates (2.78) and Brinkmann coordinates (2.77).

2. Bosonic String Theory: the Polyakov and Nambu-Goto Actions

[6] Older versions of these notes contained an incorrect argument - thanks to Jacques Grand for alerting me to this.

(a) Calculate the world-sheet energy momentum tensor (2.49) of the Polyakov string action (2.46), verify that it is traceless and that its vanishing is equivalent to the constraints (2.52,2.53).

(b) Use the $h_{\alpha\beta}$ equations of motion $T_{\alpha\beta} = 0$ to eliminate $h_{\alpha\beta}$ from the Polyakov action, and show that then the Polyakov action becomes the (Dirac-)Nambu-Goto action

$$S_P(X,h) \to S_{NG}(X) = \frac{1}{\pi}\int d^2z \sqrt{|\det g_{\mu\nu}(X)\partial_\alpha X^\mu \partial_\beta X^\nu|}\ . \qquad (2.104)$$

(c) What is the geometrical significance of the Nambu-Goto action and its extrema?

3 Plane Waves II: Symmetries

3.1 The Heisenberg Isometry Algebra of a Generic Plane Wave

We now study the isometries of a generic plane wave metric. In Brinkmann coordinates, because of the explicit dependence of the metric on u and the transverse coordinates, only one isometry is manifest, namely that generated by the parallel null vector $Z = \partial_v$. In Rosen coordinates, the metric depends neither on V nor on the transverse coordinates y^k, and one sees that in addition to $Z = \partial_V$ there are at least d more Killing vectors, namely the ∂_{y^k}. Together these form an Abelian translation algebra acting transitively on the null hypersurfaces of constant U.

However, this is not the whole story. Indeed, one particularly interesting and peculiar feature of plane wave space-times is the fact that they generically possess a *solvable* (rather than semi-simple) isometry algebra, namely a Heisenberg algebra, only part of which we have already seen above.

All Killing vectors V can be found in a systematic way by solving the Killing equations

$$L_V g_{\mu\nu} = \nabla_\mu V_\nu + \nabla_\nu V_\mu = 0 \ . \tag{3.1}$$

I will not do this here but simply present the results of this analysis in Brinkmann coordinates.[7] The upshot is that a generic $(2+d)$-dimensional plane wave metric has a $(2d+1)$-dimensional isometry algebra generated by the Killing vector $Z = \partial_v$ and the $2d$ Killing vectors

$$X(f_{(K)}) \equiv X_{(K)} = f_{(K)a}\partial_a - \dot{f}_{(K)a}x^a\partial_v \ . \tag{3.2}$$

Here the $f_{(K)a}$, $K = 1, \ldots, 2d$ are the $2d$ linearly independent solutions of the *harmonic oscillator equation* (again!)

$$\ddot{f}_a(u) = A_{ab}(u)f_b(u) \ . \tag{3.3}$$

These Killing vectors satisfy the algebra

$$[X_{(J)}, X_{(K)}] = W(f_{(J)}, f_{(K)})Z \tag{3.4}$$

$$[X_{(J)}, Z] = 0 \ . \tag{3.5}$$

Here $W(f_{(J)}, f_{(K)})$, the *Wronskian* of the two solutions, is defined by

$$W(f_{(J)}, f_{(K)}) = \sum_a (\dot{f}_{(J)a}f_{(K)a} - \dot{f}_{(K)a}f_{(J)a}) \ . \tag{3.6}$$

[7] For a detailed analysis see e.g. [26].

It is constant (independent of u) as a consequence of the harmonic oscillator equation. Thus $W(f_{(J)}, f_{(K)})$ is a constant, non-degenerate, even-dimensional antisymmetric matrix.[8] Hence it can be put into standard (Darboux) form. Explicitly, a convenient choice of basis for the solutions $f_{(J)}$ is obtained by splitting the $f_{(J)}$ into two sets of solutions

$$\{f_{(J)}\} \to \{p_{(a)}, q_{(a)}\} \tag{3.7}$$

characterised by the initial conditions

$$\begin{aligned} p_{(a)b}(u_0) &= \delta_{ab} \quad \dot{p}_{(a)b}(u_0) = 0 \\ q_{(a)b}(u_0) &= 0 \quad \dot{q}_{(a)b}(u_0) = \delta_{ab} \ . \end{aligned} \tag{3.8}$$

Since the Wronskian of these functions is independent of u, it can be determined by evaluating it at $u = u_0$. Then one can immediately read off that

$$\begin{aligned} W(q_{(a)}, q_{(b)}) &= W(p_{(a)}, p_{(b)}) = 0 \\ W(q_{(a)}, p_{(b)}) &= \delta_{ab} \ . \end{aligned} \tag{3.9}$$

Therefore the corresponding Killing vectors

$$Q_{(a)} = X(q_{(a)}) \ , \qquad P_{(a)} = X(p_{(a)}) \tag{3.10}$$

and Z satisfy the canonically normalised Heisenberg algebra

$$\begin{aligned} [Q_{(a)}, Z] &= [P_{(a)}, Z] = 0 \\ [Q_{(a)}, Q_{(b)}] &= [P_{(a)}, P_{(b)}] = 0 \\ [Q_{(a)}, P_{(b)}] &= \delta_{ab} Z \ . \end{aligned} \tag{3.11}$$

3.2 Symmetric Plane Waves

Generically, a plane wave metric has just this Heisenberg algebra of isometries. It acts transitively on the null hyperplanes $u = const.$, with a simply transitive Abelian subalgebra. However, for special choices of $A_{ab}(u)$, there may of course be more Killing vectors. These could arise from internal symmetries of A_{ab}, giving more Killing vectors in the transverse directions. For example, the conformally flat plane waves (2.69) have an additional $SO(d)$ symmetry (and conversely $SO(d)$-invariance implies conformal flatness).

Of more interest to us is the fact that for particular $A_{ab}(u)$ there may be Killing vectors with a ∂_u-component. The existence of such a Killing vector renders the plane wave

[8] Non-degeneracy is implied by the linear independence of the solutions $f_{(J)}$.

homogeneous (away form the fixed points of this extra Killing vector). The obvious examples are plane waves with a u-independent profile A_{ab},

$$ds^2 = 2dudv + A_{ab}x^a x^b du^2 + d\vec{x}^2 \ , \tag{3.12}$$

which have the extra Killing vector $X = \partial_u$. Since A_{ab} is u-independent, it can be diagonalised by a u-independent orthogonal transformation acting on the x^a. Moreover, the overall scale of A_{ab} can be changed, $A_{ab} \to \mu^2 A_{ab}$, by the coordinate transformation (boost)

$$(u, v, x^a) \to (\mu u, \mu^{-1} v, x^a) \ . \tag{3.13}$$

Thus these metrics are classified by the eigenvalues of A_{ab} up to an overall scale and permutations of the eigenvalues.

Since A_{ab} is constant, the Riemann curvature tensor is covariantly constant,

$$\bar{\nabla}_\mu \bar{R}_{\lambda\nu\rho\sigma} = 0 \Leftrightarrow \partial_u A_{ab} = 0 \ . \tag{3.14}$$

Thus a plane wave with constant wave profile A_{ab} is locally symmetric.

The existence of the additional Killing vector $X = \partial_u$ extends the Heisenberg algebra to the harmonic oscillator algebra, with X playing the role of the number operator or harmonic oscillator Hamiltonian. Indeed, X and $Z = \partial_v$ obviously commute, and the commutator of X with one of the Killing vectors $X(f)$ is

$$[X, X(f)] = X(\dot{f}) \ . \tag{3.15}$$

Note that this is consistent, i.e. the right-hand-side is again a Killing vector, because when A_{ab} is constant and f satisfies the harmonic oscillator equation then so does its u-derivative $\dot{f}$. In terms of the basis (3.10), we have

$$\begin{aligned} [X, Q_{(a)}] &= P_{(a)} \\ [X, P_{(a)}] &= A_{ab} Q_{(b)} \ , \end{aligned} \tag{3.16}$$

which is the harmonic oscillator algebra.

We can now see that such a locally symmetric plane wave is indeed also symmetric in the group theory sense. Namely, it can be realised as a coset (homogeneous) space G/H, with G the group corresponding to the extended Heisenberg algebra and H the abelian subgroup generated by, say, the P_a. At the Lie algebra level, these satisfy the conditions

$$\begin{aligned} &\mathfrak{g} = \mathfrak{h} \oplus \mathfrak{m} \\ &[\mathfrak{h}, \mathfrak{m}] \subset \mathfrak{m} \\ &[\mathfrak{m}, \mathfrak{m}] \subset \mathfrak{h} \end{aligned} \tag{3.17}$$

for the coset to be symmetric. As such Lorentzian symmetric spaces, they were discussed in the mathematics literature by Cahen and Wallach more than 30 years ago [30] (for a nice exposition see [31]). Thus plane waves with constant A_{ab} are sometimes called Cahen-Wallach spaces. I will refer to them as symmetric plane waves.

Another way of understanding the relation between $X = \partial_u$ and the harmonic oscillator Hamiltonian is to look at the conserved charge associated with X for particles moving along geodesics. Given any Killing vector X, the quantity

$$Q_X = X_\mu \dot{x}^\mu \tag{3.18}$$

is constant along the trajectory of the geodesic $x^\mu(\tau)$. For $X = \partial_u$ one finds

$$Q_X = p_u = g_{u\mu}\dot{x}^\mu \tag{3.19}$$

which we had already identified (up to a constant for non-null geodesics) as minus the harmonic oscillator Hamiltonian in section 2.3. This is indeed a conserved charge iff the Hamiltonian is time-independent i.e. iff A_{ab} is constant.

We thus see that the dynamics of particles (and strings) in a symmetric plane wave background is intimately related to the geometry of the background itself.

3.3 Singular Scale-Invariant Homogeneous Plane Waves

Given that plane waves with constant A_{ab} are not only homogeneous but actually symmetric, it is natural to ask if there are plane waves with u-dependent A_{ab} which are still homogeneous (but not symmetric). One simple example is a plane wave with the non-trivial profile

$$A_{ab}(u) = u^{-2} B_{ab} \tag{3.20}$$

for some constant matrix $B_{ab} = A_{ab}(1)$. Without loss of generality one can then assume that B_{ab} and A_{ab} are diagonal, with eigenvalues the oscillator frequency squares $-\omega_a^2$,

$$A_{ab} = -\omega_a^2 \delta_{ab} u^{-2} \quad . \tag{3.21}$$

The plane wave metric

$$d\bar{s}^2 = 2dudv + B_{ab}x^a x^b \frac{du^2}{u^2} + d\vec{x}^2 \tag{3.22}$$

is invariant under the boost/scaling (3.13), corresponding to the extra Killing vector

$$X = u\partial_u - v\partial_v \quad . \tag{3.23}$$

Note that in this case the Killing vector $Z = \partial_v$ is no longer a central element of the isometry algebra, since it has a non-trivial commutator with X,

$$[X, Z] = Z \ . \tag{3.24}$$

Moreover, one finds that the commutator of X with a Heisenberg algebra Killing vector $X(f)$, f_a a solution to the harmonic oscillator equation, is the Heisenberg algebra Killing vector

$$[X, X(f)] = X(u\dot{f}) \ , \tag{3.25}$$

corresponding to the solution $u\dot{f}_a = u\partial_u f_a$ of the harmonic oscillator equation.

Plane Waves with precisely this kind of profile and scale invariance have been found to occur universally as the Penrose Limits of space-time singularities [27, 25], see sections 5 and 6 of these notes. One important consequence of this scale invariance is that now the light-cone momentum p_v drops out of the transverse geodesic equation (2.30) as well as the transverse string mode equation (2.56). For more information on these metrics see [32] and [26].

3.4 A Peculiar Conformal Equivalence

Here is a peculiar observation, whose significance for (string theory in) plane waves in general, and the above scale-invariant homogeneous plane waves in particular, escapes me at the moment, but which I record here anyway.

Namely, consider a pp-wave metric of the form

$$ds'^2 = 2du'dv' + K'(u', x'^a)du'^2 + d\vec{x}'^2 \tag{3.26}$$

and perform the coordinate transformation [1]

$$u' = -1/u \ , \quad v' = v + \vec{x}^2/2u \ , \quad x' = x/u \tag{3.27}$$

(somewhat reminiscent of the transformation (2.84) form Rosen to Brinkmann coordinates). Then one finds that

$$ds'^2 = u^{-2}ds^2 \tag{3.28}$$

where ds^2 is another pp-wave metric of the same type,

$$ds^2 = 2dudv + K(u, x^a)du^2 + d\vec{x}^2 \ , \tag{3.29}$$

but now with wave profile

$$K(u, x) = u^{-2}K'(u'(u), x'(u, x)) \ . \tag{3.30}$$

Applying this to plane waves,

$$K'(u',x') = A'_{ab}(u')x'^a x'^b \ , \tag{3.31}$$

one finds

$$K(u,x) = u^{-4}A'_{ab}(-1/u)x^a x^b \equiv A_{ab}(u)x^a x^b \ . \tag{3.32}$$

In particular, therefore, symmetric plane waves are conformally related to plane waves with profile $\sim u^{-4}$ and, more remarkably, the scale-invariant plane waves are the unique plane waves which are conformally related to themselves under this transformation,

$$A'_{ab}(u) = A_{ab}(u) \quad \Leftrightarrow \quad A'_{ab}(u) \sim u^{-2} \ . \tag{3.33}$$

For more information on conformal symmetries of pp-wave space-times, see [33] and references therein, and [34] for some other (not obviously related) observations regarding conformal transformations and plane waves.

3.5 Yet More Homogeneous Plane Waves

So far we have found two classes of homogeneous plane waves, the symmetric plane waves with constant wave profile and the scale-invariant plane waves with wave profile $\sim u^{-2}$. Are there other examples of homogeneous plane waves?

This question has been analysed in [26], and the answer is that, yes, there are two families of homogeneous plane waves, one generalising the symmetric (Cahen-Wallach) plane waves (3.12), the other the singular homogeneous plane waves (3.22).[9] The metrics in both families are parametrised by a constant symmetric matrix C_{ab} and a constant antisymmetric matrix f_{ab}.

Metrics in the first family have the profile

$$A_{ab}(u) = (\mathrm{e}^{uf}C\mathrm{e}^{-uf})_{ab} \ . \tag{3.34}$$

These reduce to symmetric plane waves for $f_{ab} = 0$. Note that in this case a time-derivative of $A_{ab}(u)$ can be undone by a rotation of the coordinates by f_{ab}, and thus such metrics have the extra Killing vector

$$X = \partial_u + f_{ab}x^b\partial_a \ . \tag{3.35}$$

Clearly all of these homogeneous plane waves are completely non-singular and geodesically complete, and they will be solutions to the vacuum Einstein equations iff C_{ab} is traceless.

[9] This generalises the known classical result in $D = d + 2 = 4$ [1, 2].

An example of a vacuum solution is the anti–Mach[10] metric of Ozsvath and Schücking [35], with

$$f = \begin{pmatrix} 0 & 1 \\ -1 & 0 \end{pmatrix} \quad , \quad C = \begin{pmatrix} 1 & 0 \\ 0 & -1 \end{pmatrix} \quad , \tag{3.36}$$

leading to

$$A(u) = \begin{pmatrix} \cos 2u & -\sin 2u \\ -\sin 2u & -\cos 2u \end{pmatrix} \quad . \tag{3.37}$$

The structure of these metrics becomes more transparent in stationary coordinates, obtained by the rotation

$$x^a \to (\mathrm{e}^{-uf})_{ab} x^b \quad , \tag{3.38}$$

in which the metric becomes manifestly independent of u,

$$d\bar{s}^2 = 2dudv + k_{ab}x^a x^b du^2 + 2f_{ab}x^a dx^b du + d\vec{x}^2 \quad , \tag{3.39}$$

with

$$k_{ab} = C_{ab} - f_{ab}^2 \quad . \tag{3.40}$$

Notice that this class of metrics, the smooth homogeneous plane waves, can also be regarded as the special case of the general pp-wave metric (2.18) with K and A independent of u and quadratic and linear in the x^a respectively.

In these coordinates, the additional Killing vector is just $X = \partial_u$, and the corresponding conserved charge is the light-cone Hamiltonian which is now that of an harmonic oscillator coupled to the constant magnetic field f_{ab}. For a detailed analysis of string theory in such backgrounds see [36].

Finally metrics in the second family have the profile

$$A_{ab}(u) = u^{-2}(\mathrm{e}^{(\log u)f} C \mathrm{e}^{-(\log u)f})_{ab} \quad . \tag{3.41}$$

They have null singularities at $u = 0$ and generalise the metrics (3.22). Mutatis mutandis the same comments about isometries and "stationary" coordinates apply to this family of metrics (which has not yet been fully analysed in the string theory context).

3.6 Exercises for Section 3

1. Isometries of Plane Waves

   (a) Verify that (3.2) are Killing vectors of a plane wave metric in Brinkmann coordinates.

[10] It is (vaguely) anti-Machian in the sense that there is inertia without (distant) matter.

(b) In Rosen coordinates, the $(d+1)$ translational isometries in the V and y^k directions, generated by the Killing vectors $Z = \partial_V$ and $Q_{(k)} = \partial_{y^k}$ are manifest. Show that the "missing" d Killing vectors are given by

$$P_{(k)} = y^k \partial_V - \int^u du' \; \bar{g}^{km}(u') \partial_{y^m} \tag{3.42}$$

and verify that together they generate the Heisenberg algebra (3.11).

2. Scale-Invariant Plane Waves

(a) Show that the conserved charge Q_X associated to the extra Killing vector (3.23) of a scale-invariant plane wave can be written as

$$Q_X = up_u - vp_v = -\tau H_{ho}(\tau) + \tfrac{1}{2} x^a \dot{x}^a \quad , \tag{3.43}$$

and verify explicitly that this is indeed a conserved quantity for an harmonic oscillator with time-dependent frequencies $\sim 1/\tau^2$

(b) Verify that the commutator (Lie bracket) of the extra Killing vector X with a Heisenberg algebra Killing vector $X(f)$ is again a Heisenberg algebra Killing vector. In particular, determine $[X, Q_{(a)}]$ and $[X, P_{(a)}]$.

(c) Verify the statements of section 3.4.

4 Penrose Limits I: via Adapted Coordinates

4.1 Summary of the Construction

The Penrose limit [12] associates to every space-time metric $g_{\mu\nu}$ or line element $ds^2 = g_{\mu\nu}dx^\mu dx^\nu$ and choice of null geodesic γ in that space-time a (limiting) plane wave metric. The first step is to rewrite the metric in coordinates adapted to γ, Penrose coordinates, as

$$ds^2_\gamma = 2dUdV + a(U,V,Y^k)dV^2 + 2b_i(U,V,Y^k)dVdY^i + g_{ij}(U,V,Y^k)dY^idY^j \quad (4.1)$$

This corresponds to an embedding of γ into a twist-free congruence of null geodesics, given by V and Y^k constant, with U playing the role of the affine parameter and $\gamma(U)$ coinciding with the geodesic at $V = Y^k = 0$.

The next step is to perform the change of coordinates ($\lambda \in \mathbb{R}$)

$$(U,V,Y^k) = (u, \lambda^2\tilde{v}, \lambda y_k) \ . \quad (4.2)$$

The Penrose limit metric $\bar{g}_{\mu\nu}$ is then defined by

$$d\bar{s}^2 = \lim_{\lambda\to 0} \lambda^{-2} ds^2_{\gamma,\lambda} = 2dud\tilde{v} + \bar{g}_{ij}(U)dy^idy^j \ , \quad (4.3)$$

where $ds^2_{\gamma,\lambda}$ is the metric ds^2_γ in the coordinates $(u, \bar{v}, y^i)$ and $\bar{g}_{ij}(U) = g_{ij}(U,0,0)$. This is the metric of a plane wave in Rosen coordinates. Pragmatically speaking, once one has written the metric in adapted coordinates the Penrose limit metric is obtained by setting the components a and b_i of the metric to zero and restricting g_{ij} to the null geodesic γ.

As we already know, a coordinate transformation $(u, \tilde{v}, y^k) \to (u, v, x^a)$ then puts the metric into the standard Brinkmann form

$$d\bar{s}^2 = 2dudv + A_{ab}(u)x^ax^bdu^2 + d\vec{x}^2 \ . \quad (4.4)$$

Here

$$A_{ab}(u) = -\bar{R}_{aubu}(u) = -\bar{R}_{iuju}(u)\bar{E}^i_a(u)\bar{E}^j_b(u) \ , \quad (4.5)$$

with $\bar{R}_{aubu}(u)$ the only non-vanishing component of the Riemann curvature tensor of $\bar{g}_{\mu\nu}$. $\bar{E}^i_a$ is an orthonormal coframe for the transverse metric $\bar{g}_{ij}$, satisfying the symmetry condition (2.82),

$$\dot{\bar{E}}_{ai}\bar{E}^i_b = \dot{\bar{E}}_{bi}\bar{E}^i_a \ . \quad (4.6)$$

While this is, in a nutshell, the construction of the Penrose limit metric, several things remain to be understood/clarified, and we will address them in the subsequent sections.

In particular, the above sequence of coordinate transformations manages to hide quite effectively the relation between the original data $(g_{\mu\nu}, \gamma)$ and the wave profile $A_{ab}(u)$ characterising the final result, and thus the geometrical significance of the Penrose limit.

Among the issues we will deal with are

- the construction of adapted coordinates (sections 4.2 and 4.3 and Apendix B);
- the physical picture behind the scaling involved in the Penrose limit (section 4.4)
- general properties of the Penrose limit (sections 4.5, 4.6, and section 5);
- the geometrical interpretation (and generally covariant significance) of the Penrose limit (section 5);
- the (universal) behaviour of Penrose limits near space-time singularities (section 6).

4.2 Adapted Coordinates for Null Geodesics

Consider metrics of the form

$$ds^2 = 2dUdV + a(U, V, Y^k)dV^2 + 2b_i(U, V, Y^k)dY^i dV + g_{ij}(U, V, Y^k)dY^i dY^j \quad , \quad (4.7)$$

where, as indicated, the components a, b_i, g_{ij} of the metric can depend on all the coordinates (U, V, Y^k). This class of metrics is characterised by the fact that $g_{UV} = 1$ and $g_{UU} = g_{Ui} = 0$. Since these are $D = d + 2$ coordinate conditions, this suggests that generically any metric can locally be written in this way - we will establish this below. A special case of this are Rosen coordinates for plane wave metrics - cf. the discussion in section 2.9.

The most obvious feature of the above metric is that with respect to it the vector field ∂_U is null, and it is easy to see that it is also a geodesic vector field, with U playing the role of an affine parameter along the null geodesic integral curves of ∂_U. Indeed, ∂_U is geodesic if

$$\nabla_{\partial_U}\partial_U = 0 \Leftrightarrow \Gamma_{\mu UU} = 0 \quad . \quad (4.8)$$

Since $g_{UU} = 0$, this reduces to the statement that $g_{\mu U}$ be U-indpeendent, which is obviously the case.

Thus the above metric defines a special kind of null geodesic congruence: in the region of validity of the above coordinate system there is a unique null geodesic passing through any point, and we can therefore parametrise (coordinatise) the points by the value of the affine parameter U on that geodesic and the transverse coordinates (V, Y^i) labelling

the geodesics.[11] For the experts: the "special" refers to the fact that this congruence is twist-free.

Now, given any particular null geodesic $x^\mu(\tau)$ of a space-time with metric $g_{\mu\nu}$, we will say that (U, V, Y^i) are "Penrose coordinates" or "adapted coordinates", if the metric in these coordinates takes the above form, with $x^\mu(\tau)$ corresponding to the geodesic $V = Y^i = 0$ with $U = \tau$. It follows from the above that finding such a coordinate system is tantamount to embedding the original null geodesic into a twist-free null geodesic congruence.

4.3 Adapted Coordinates and Hamilton-Jacobi Theory

I will now show that such a coordinate system always exists. This construction makes use (in a mild way) of the Hamilton-Jacobi (HJ) formalism, which I will assume you are familiar with. The suggestion that the HJ formalism provides a way of constructing adapted coordinates appeared first in [24] where however no general proof was given. We will see below that this is a useful constructive (albeit somewhat roundabout) approach to determining the Penrose limits of a space-time, and thus it is worthwhile to spell this out explicitly. The argument here is taken from [25].

The essence of the HJ method can be summarised by the observation that the momenta

$$p_\mu = g_{\mu\nu}\frac{dx^\nu}{d\tau} \tag{4.9}$$

associated with the above null congruence ($\dot{U} = 1, \dot{V} = \dot{Y}^k = 0$) are

$$p_{_V} = 1 \ , \qquad p_{_U} = p_{_{Y^k}} = 0 \ , \tag{4.10}$$

so that, in arbitrary coordinates x^μ, one has

$$p_\mu = \partial_\mu V \ . \tag{4.11}$$

Thus, since the geodesic congruence is null, $g^{\mu\nu}\partial_\mu V \partial_\nu V = 0$, one can identify

$$V(x^\mu) = S(x^\mu) \ . \tag{4.12}$$

with the solution of the Hamilton-Jacobi equation

$$g^{\mu\nu}\partial_\mu S \partial_\nu S = 0 \ . \tag{4.13}$$

[11] The determinant of this metric is equal to the determinant of g_{ij}. As we have seen in section 2.9 in the case of adapted (Rosen) coordinates for plane waves, degeneracy of $g_{ij}(U)$ signals the appearance of intersecting geodesics and hence the breakdown of a coordinate system based on the geodesic congruence.

corresponding to the null congruence (4.10),

$$\dot{x}^\mu = g^{\mu\nu}\partial_\nu S \ . \tag{4.14}$$

Conversely, any solution S of the equations (4.13,4.14) gives rise to a (twist-free) null geodesic congruence,

$$\dot{x}^\rho \nabla_\rho \dot{x}^\mu = g^{\rho\sigma} g^{\mu\nu} \nabla_\rho \partial_\nu S \partial_\sigma S = \frac{1}{2} g^{\mu\nu} \partial_\nu (g^{\rho\sigma} \partial_\rho S \partial_\sigma S) = 0 \ , \tag{4.15}$$

and $V = S$ is the corresponding null adapted coordinate.

It thus only remains to understand how to construct the transverse coordinates Y^k. In practice, and in sufficiently simple examples, once $V = S$ has been found (this is the key step), one can construct the Y^k from the parameters labelling the geodesic congruence. The general (and slightly more involved) construction is of interest in its own right, not only because it can be applied to more complicated examples but also because it provides some geometric insight. It is described in Appendix B.

4.4 The Penrose Limit

The physical interpretation of the Penrose limit is described by Penrose as follows [12]:

> *We envisage a succession of observers travelling in the space-time M whose world lines approach the null geodesic γ more and more closely; so we picture these observers as travelling with greater and greater speeds, approaching that of light. As their speeds increase they must correspondingly recalibrate their clocks to run faster and faster (assuming that all space-time measurements are referred to clock measurements in the standard way), so that in the limit the clocks measure the affine parameter x^0 along γ. (Without clock recalibration a degenerate space-time metric would result.) In the limit the observers measure the space-time to have the plane wave structure W_γ.*

In other words, the Penrose limit can be understood as a boost accompanied by a commensurate uniform rescaling of the coordinates in such a way that the affine parameter along the null geodesic remains invariant.

To implement this procedure in practice, we consider a Lorentzian space-time with a metric $g_{\mu\nu}$, choose some null geodesic γ, and locally write the metric in an adapted coordinate system (4.7),

$$x^\mu \to (U, V, Y^k) \ , \tag{4.16}$$

where it takes the form

$$ds^2_\gamma = 2dUdV + a(U,V,Y^k)dV^2 + 2b_i(U,V,Y^k)dY^i dV + g_{ij}(U,V,Y^k)dY^i dY^j \quad . \tag{4.17}$$

Now we perform the boost

$$(U,V,Y^k) \to (\lambda^{-1}U, \lambda V, Y^k) \quad . \tag{4.18}$$

Trying to take the infinite boost limit $\lambda \to 0$ without recalibrating one's coordinates (clocks and measuring rods) evidently results in a singular metric. To offset this, we uniformly rescale the coordinates as

$$(U,V,Y^k) \to (\lambda U, \lambda V, \lambda Y^k)$$

The net effect is thus the asymmetric scaling[12]

$$(U,V,Y^k) \to (U, \lambda^2 V, \lambda Y^k) \tag{4.19}$$

of the coordinates, leaving the affine parameter $U = u$ invariant. We will write this as

$$(U,V,Y^k) = (u, \lambda^2 \tilde{v}, \lambda y_k) \quad , \tag{4.20}$$

and thus obtain a one-parameter family of (isometric) metrics

$$ds^2_\gamma \to ds^2_{\gamma,\lambda} \quad , \tag{4.21}$$

where $ds^2_{\gamma,\lambda}$ is the metric ds^2_γ in the coordinates $(u, \bar{v}, y^i)$,

$$ds^2_{\gamma,\lambda} = 2\lambda^2 du d\tilde{v} + \lambda^4 a(u, \lambda^2\tilde{v}, \lambda y^k) d\tilde{v}^2 + 2\lambda^3 b_i(u, \lambda^2\tilde{v}, \lambda y^k) dy^i d\tilde{v} + \lambda^2 g_{ij}(u, \lambda^2\tilde{v}, \lambda y^k) dy^i dy^j \quad . \tag{4.22}$$

We accompany this by an overall rescaling of the metric,

$$ds^2_{\gamma,\lambda} \to \lambda^{-2} ds^2_{\gamma,\lambda} \quad , \tag{4.23}$$

leading to

$$\lambda^{-2} ds^2_{\gamma,\lambda} = 2du d\tilde{v} + \lambda^2 a(u, \lambda^2\tilde{v}, \lambda y^k) d\tilde{v}^2 + 2\lambda b_i(u, \lambda^2\tilde{v}, \lambda y^k) dy^i d\tilde{v} + g_{ij}(u, \lambda^2\tilde{v}, \lambda y^k) dy^i dy^j \quad . \tag{4.24}$$

Now taking the combined infinite boost and large volume limit $\lambda \to 0$ results in a well-defined and non-degenerate metric $\bar{g}_{\mu\nu}$,

$$\text{Penrose Limit: } d\bar{s}^2 = \lim_{\lambda\to 0} \lambda^{-2} ds^2_{\gamma,\lambda} \tag{4.25}$$

$$= 2du d\bar{v} + \bar{g}_{ij}(u) dy^i dy^j \quad , \tag{4.26}$$

[12]Note incidentally that this is like the scaling (2.72) that we used to establish the vanishing of curvature invariants for plane waves.

where $\bar{g}_{ij}(u) = g_{ij}(u,0,0)$ is the restriction of g_{ij} to the null geodesic γ. This is the metric of a plane wave in Rosen coordinates which we can, in the usual way (2.84), now transform to Brinkmann coordinates.

At this point you may have the impression that the entire procedure of going from the original data $(g_{\mu\nu}, \gamma)$ to the Penrose limit plane wave metric $\bar{g}_{\mu\nu}$, summarised again in the diagram (5.1) at the beginning of section 5, is rather round-about and confusing. I agree. We will improve on this situation in section 5.

Here are some more remarks on this procedure:

- Note that the absence of g_{Ui}-terms from the metric in an adapted coordinate system is crucial for this limit to exist (such a term would scale as λ^{-1}).
- We also learn that, whatever the nature of the transverse coordinates Y^k may have been before taking the limit (e.g. angular coordinates), because of the large volume limit after taking the Penrose limit the y^k have infinite range.
- Moreover, any points that were at a finite distance of the null geodesic before the Penrose limit have been pushed off to infinity and in the Penrose limit only an infinitesimal neighbourhood of the null geodesic survives.
- The requirement of restricting oneself to a small segment of a null geodesic arose from the desire to work in adapted coordinates (which generically only exist locally). One may thus get the impression that the plane wave limit space-time sees only an infinitesimal neighbourhood of a small segment of the geodesic (blown-up to cover all of space-time). However, this is misleading. Upon transforming to Brinkmann coordinates one recovers the entire original null geodesic, with the affine parameter U running from $-\infty$ to $+\infty$ unless the geodesic runs into a singularity of $A_{ab}(u)$, i.e. a curvature singularity (section 2.7). Look at the example of the Schwarzschild metric below for a concrete illustration of these facts.
- A better picture of the Penrose limit is thus that of an infinitesimal neighbourhood of the entire null geodesic, blown-up to cover all of space-time.

All of this will become more transparent in terms of the covariant interpretation of the Penrose limit to be discussed in section 5. Moreover, singularities and Penrose Limits are the subject of section 6. For the time being, however, we will use the above definition to study some basic properties and examples of Penrose Limits.

4.5 Covariance of the Penrose Limit

We have seen above that the Penrose limit construction associates to any choice of Lorentzian metric and (a segment of) a null geodesic a plane wave metric. Let us now inquire to what extent this plane wave metric depends on the choice of null geodesic. A null geodesic γ is characterised (at least for small values of the affine parameter) by specifying the initial position $\gamma(0)$ and the initial velocity $\dot{\gamma}(0)$. In fact, the Penrose limit is only susceptible to the initial *direction* of the geodesic. Indeed, if γ_1 and γ_2 are two null geodesics starting at the same point but with collinear velocities; that is, $\dot{\gamma}_1(0) = c\dot{\gamma}_2(0)$ for some nonzero constant c, then the geodesics are related by a rescaling of the affine parameter. The resulting Penrose limits are related by a rescaling of u, which can be reabsorbed in a reciprocal rescaling of the conjugate coordinate v. In other words, the Penrose limit depends on the actual curve traced by the geodesic and not on how it is parametrised. We conclude that the Penrose limit depends only on the data $(\gamma(0), [\dot{\gamma}(0)])$, where $\gamma(0)$ is a point in M and $[\dot{\gamma}(0)]$ is a point on the (future-pointing, say) celestial sphere at $\gamma(0)$.[13]

A fundamental property of the Penrose limit is that if two null geodesics are related by an isometry, their Penrose limits are themselves isometric. We shall refer to this as the *covariance property* of the Penrose limit. This property is very useful for classifying the possible Penrose limits in space-times with a large isometry group: the more isometries there are, the less distinct Penrose limits there are.

The covariance property holds because the isometry in question is by assumption λ-independent and will therefore continue to exist when $\lambda = 0$. By contrast, if two metrics g_λ and h_λ are related by a λ-dependent isometry, then their Penrose limits need not be isometric because the isometry between them could become singular in the limit.

4.6 Some elementary hereditary properties of Penrose limits

We have seen above that the Penrose limit of any metric is a plane wave. In particular, as such, it has a Heisenberg algebra of isometries regardless of whether the original metric had any symmetries or not (with a similar statement about supersymmetries in the supergravity context). Therefore the existence of this Heisenberg algebra does not reflect any properties of the original metric. However, it is also of interest to investigate what properties of the original metric are preserved by the limiting procedure and thus continue to be a property of the resulting plane wave metric one finds in the Penrose limit.

[13] This is the projectivisation of the nonzero future-pointing null vectors in $T_{\gamma(0)}M$, M the space-time manifold.

The appropriate framework for addressing these questions has been introduced by Geroch in 1969 [37]. In this somewhat more general context one considers a (one-parameter) family of space-times (M_λ, g_λ) for $\lambda > 0$ and tries to make sense and study the properties of the limit space-time as $\lambda \to 0$.

Geroch calls a property of space-times *hereditary* if, whenever a family of space-times have that property, all the limits of this family also have this property. In the more restricted context of Penrose limits, it is convenient to slightly modify this definition. We will call a property of a space-time *hereditary* if, whenever a space-time has this property, all its Penrose limits also have this property.

Thus to check if a certain property of a space-time is hereditary, we first have to check if it is preserved under the coordinate transformation (4.19) and the accompanying scaling of the metric. Since we are only interested in generally covariant (coordinate independent) properties of a space-time or metric, this amounts to checking if the property of interest is invariant under a finite scaling of the metric before investigating what happens as $\lambda \to 0$.

Certain space-time properties are rather obviously hereditary, for example those that can be expressed in terms of tensorial equations for the Riemann tensor. Indeed, one of the most elementary and basic hereditary properties of any family of space-times is the following [37]: If there is some tensor field constructed from the Riemann tensor and its derivatives which vanishes for all $\lambda > 0$, then it also vanishes for $\lambda = 0$. For example:

- the Penrose limit of a Ricci-flat metric is Ricci-flat;
- the Penrose limit of a conformally flat metric (vanishing Weyl tensor) is conformally flat; in particular, therefore, according to (2.69), it is characterised by the spherically symmetric wave profile $A_{ab}(u) = \delta_{ab}A(u)$;
- the Penrose limit of a locally symmetric metric (vanishing covariant derivative of the Riemann tensor) is locally symmetric.

However, the Penrose limit of an Einstein metric with fixed non-zero cosmological constant or scalar curvature is not of the same type, as the Ricci scalar, unlike the Ricci tensor, is not scale-invariant. In other words,

$$R_{\mu\nu}(g) = \Lambda g_{\mu\nu} \tag{4.27}$$

is only invariant under a simultaneous scaling of the metric g and Λ,

$$R_{\mu\nu}(\lambda^{-2}g) = R_{\mu\nu}(g) = (\lambda^2\Lambda)(\lambda^{-2}g_{\mu\nu}) \ . \tag{4.28}$$

Therefore we see that

- the Penrose limit of an Einstein metric is Ricci-flat

The same kind of reasoning establishes that

- all the scalar currvature invariants of a Penrose limit metric are zero,

a result that we had already established in section 2.6 (as a general property of plane wave metrics) but that we have now rederived without making use of the knowledge that the Penrose limit results in such a plane wave metric.

There are also more subtle hereditary properties of Penrose limits (or families of space-times in general). For example, when it comes to isometries, one could imagine that in the (Penrose) limit of family of space-times, all possessing a certain number n of Killing vectors, one finds less linearly independent Killing vectors simply because some Killing vectors which happen to be linearly independent for all $\lambda > 0$ cease to be linearly independent at $\lambda = 0$. This is at least what a direct approach to the problem would suggest as being possible.

However, a very elegant and powerful argument due to Geroch [37] establishes that the number of linearly independent Killing vectors can never decrease in the limit. This argument has the additional virtue of being readily applicable to Killing spinors and supersymmetries. As a consequence one can also establish that the number of supersymmetries preserved by a supergravity configuration can never decrease in the Penrose limit.

While the argument is not difficult, it does require some elementary differential geometry and topology. If I attempted to explain these things here, we would probably never get to see some nice examples of Penrose limits. So instead I will just refer you to [14] for the details of the arguments.

Another subtle hereditary property is related to homogeneity. What I have said above about isometries may suggest to you that Penrose Limits of homogeneous space-times (i.e. space-times with a transitive isometry group) are themselves homogeneous. However, this does *not* follow - for an explicit counterexample see [24]. Roughly speaking what can happen is that a Killing vector which is a sum of a translational and a rotational Killing vector, the translational part being responsible for homogeneity, becomes purely rotational in the Penrose Limit. For a detailed analysis of the various subtle mathematical aspects of this issue, and sufficient conditions for a Penrose Limit metric to be homogeneous, see [38].

4.7 Example I: The Penrose Limit of $AdS \times S$ space-times

The Penrose Limit of $(A)dS$ (is flat)

We are now ready to determine our first Penrose limits, namely those of AdS or dS space-times. We will see that any Penrose limit of either of these two space-times is flat. In fact, this case is so simple that no explicit calculation is required. The only things that we need are the elementary hereditary properties of Penrose limits we have already discussed.

Indeed, we had seen above that the Penrose limit of any Einstein manifold is Ricci-flat and that the Penrose limit of a conformally flat space-time (vanishing Weyl tensor) is necessarily conformally flat.

Now maximally symmetric space-times (AdS, dS) are both Einstein and conformally flat. Hence their Penrose limits have vanishing Ricci and Weyl tensors. This implies that the Riemann curvature tensor is zero and hence that the Penrose limit is isometric to Minkowski space-time.

The Penrose Limit of $AdS \times S$ (is more interesting)

We now come to a "historically" (we are talking about less than 3 years ago ...) more interesting example, namely space-times of the form $AdS \times S$. In this case, a small calculation will be required, but let us first see what we can anticipate about the result on general grounds:

1. First of all, because of the covariance property of the Penrose limit, and the large number of isometries of $AdS \times S$, there can be at most two distinct Penrose limits of $AdS \times S$, corresponding to geodesics which either have or do not have a non-zero component along the sphere.

2. If the geodesic moves entirely in the AdS part of $AdS \times S$, then the Penrose limit is the Penrose limit of AdS times a large volume limit on S, and hence flat.

3. We are thus interested in null geodesics with non-zero angular momentum along the S direction. There is one more property of $AdS \times S$ that we have not made use of yet, namely that it is (locally) symmetric, i.e. has a covariantly constant Riemann tensor. This is a hereditary property and hence it must be the case that in the Penrose limit
$$\partial_u A_{ab} = 0 \ . \tag{4.29}$$

Hence the Penrose limit of $AdS \times S$ will be a plane wave with constant A_{ab}, i.e. a symmetric plane wave as discussed in section 3.2.

To find out which one, we now actually need to do a small calculation. We thus consider $AdS_{p+2} \times S^{d-p}$ with curvature radii R_A and R_S respectively. A convenient choice of coordinate system (which will turn out to be automatically adapted) is cosmological coordinates for AdS and standard spherical coordinates for S. The metric thus takes the form

$$ds^2 = R_A^2(-dt^2 + \sin^2 t d\tilde{\Omega}_{p+1}^2) + R_S^2(d\theta^2 + \sin^2\theta d\Omega_{d-p-1}^2) \ . \tag{4.30}$$

Here $d\Omega^2$ and $d\tilde{\Omega}^2$ denote the standard line elements on the unit sphere or hyperboloid respectively. Since the metric is flat in the (t, θ) plane, we can simply consider a null geodesic in that plane and introduce null coordinates

$$U = (R_S\theta - R_A t)/\sqrt{2} \ , \qquad V = (R_S\theta + R_A t)/\sqrt{2} \ , \tag{4.31}$$

in terms of which the metric reads

$$ds_\gamma^2 = 2dUdV + R_A^2 \sin^2((U-V)/\sqrt{2}R_A)d\tilde{\Omega}_{p+1}^2 + R_S^2 \sin^2((U+V)/\sqrt{2}R_S)d\Omega_{d-p-1}^2 \ . \tag{4.32}$$

This is an adapted coordinate system. Taking the Penrose limit amounts to dropping the explicit dependence on V and taking the large volume (flat) limit on the transverse sphere and hyperboloid. In that limit the prefactors R_A^2 and R_S^2 can be absorbed into the transverse coordinates, and we thus find the result

$$d\bar{s}^2 = 2dUdV + \sin^2(U/\sqrt{2}R_A)d\vec{y}_{p+1}^2 + \sin^2(U/\sqrt{2}R_S)d\vec{y}_{d-p-1}^2 \ . \tag{4.33}$$

This is, as expected, the metric of a symmetric plane wave in Rosen coordinates. In Brinkmann coordinates, the metric is then described by the constant and diagonal matrix

$$A_{ab} = -\frac{1}{2}\,\mathrm{diag}(\underbrace{R_A^{-2}, \ldots, R_A^{-2}}_{p+1}, \underbrace{R_S^{-2}, \ldots, R_S^{-2}}_{d-p-1}) \ . \tag{4.34}$$

Here the overall scale is irrelevant and thus the plane wave metric essentially depends only on the ratio R_A/R_S of the curvature radii. We thus see that we can obtain any (indecomposable) symmetric plane wave metric with A_{ab} having at most two (negative) eigenvalues as the Penrose limit of a product $AdS_m \times S^n$ by appropriate choices of m, n and the ratio of radii of curvature of the two factors.

In particular, the Penrose limit of the (maximally supersymmetric) Freund-Rubin $AdS_5 \times S^5$ solution of type IIB supergravity, which has $R_A = R_S$, is [10] the remarkably simple (maximally supersymmetric [7])) plane wave solution of IIB supergravity with metric

$$d\bar{s}^2 = 2dudv - \vec{x}^2 du^2 + d\vec{x}^2 \ . \tag{4.35}$$

More generally, other symmetric plane wave metrics with multiple eigenvalues of any sign can be obtained as the Penrose limit of products involving one (and only one) $(A)dS$ factor and multiple spheres and hyperbolic spaces of appropriate dimensions and radii of curvature.

I should mention here that frequently, following [11] and the earlier string theory literature, the Penrose limit of $AdS \times S$ (and related) space-times is performed in a somewhat different way in which one directly ends up in Brinkmann coordinates or some mixture of Rosen and Brinkmann coordinates. This procedure works well in simple examples, but I do not have anything to say about this procedure in general apart from the remark that what this essentially amounts to is a truncation of a Riemann normal coordinate expansion in the directions transverse to the null geodesic. See also [39] for some related comments.

4.8 Example II: The Penrose Limit of the Schwarzschild metric

Lest you think that taking Penrose limits is always that easy, we now consider the Penrose limit of the Schwarzschild metric

$$ds^2 = -f(r)dt^2 + f(r)^{-1}dr^2 + r^2(d\theta^2 + \sin^2\theta d\phi^2) \tag{4.36}$$

where

$$f(r) = 1 - \frac{2m}{r} \ . \tag{4.37}$$

This will illustrate many of the features of Penrose limits we have discussed in general terms above. We will rederive the results of this section in much more generality in section 5 using a different method.

Usually when discussing geodesics in the Schwarzschild geometry, e.g. in the context of solar system tests of general relativity, one argues that rotational invariance and angular momentum conservation imply that one can choose the motion to take place in the equatorial plane $\theta = \pi/2$. For present purposes this is not a good choice as we would like to extend the geodesic to a family of geodesics parametrised by the transverse coordinates (constants of integration), while the curves $\theta = const.$ are not geodesics on S^2 for $\theta \neq \pi/2$. However, the curves $\phi = const.$ are (they are great circles) and hence we will choose the motion to take place in the polar rather than equatorial plane.

With $\dot{\phi} = 0$, the Lagrangian

$$\mathcal{L} = \tfrac{1}{2}(-f(r)\dot{t}^2 + f(r)^{-1}\dot{r}^2 + r^2\dot{\theta}^2) \tag{4.38}$$

implies the (first integrals of the) equations of motion

$$\begin{aligned}\dot{\theta} &= Lr^{-2} \\ \dot{t} &= f(r)^{-1}E \ .\end{aligned} \tag{4.39}$$

E and L are the conserved energy and angular momentum respectively. For null geodesics, we supplement this by the condition $\mathcal{L} = 0$, which becomes

$$\dot{r}^2 = E^2 - L^2 f(r) r^{-2} \equiv E^2 - 2V_{eff}(r) \ . \tag{4.40}$$

Here $V_{eff}(r)$ is the usual effective potential, with respect to which $r(\tau)$ satisfies the Newtonian equation of motion

$$\ddot{r} = -V'_{eff}(r) \ . \tag{4.41}$$

We now construct the Hamilton-Jacobi function $S(x^\mu)$ by solving the conditions

$$p_\mu = \partial_\mu S \ , \qquad g^{\mu\nu} p_\mu p_\nu = 0 \ . \tag{4.42}$$

Plugging the ansatz

$$S = -Et + L\theta + \rho(r) \tag{4.43}$$

into the null constraint, we find a differential equation for $\rho(r)$, namely

$$\rho'^2 = f(r)^{-2}E^2 - L^2 f(r)^{-1} r^{-2} = f(r)^{-2}\dot{r}^2 \ . \tag{4.44}$$

This is solved by

$$\rho(r) = \int f(r)^{-1}\dot{r} dr = \int f(r)^{-1}\dot{r}^2 d\tau \ . \tag{4.45}$$

We now choose U to be the affine parameter τ, introduce $V = S(x^\mu)$ as a new coordinate, and change variables to an adapted coordinate system $(U, V, \tilde{\theta}, \tilde{\phi})$ in the following way:

$$\begin{aligned}
d\phi &= d\tilde{\phi} \\
d\theta &= \dot{\theta}(U)dU + d\tilde{\theta} \\
&= Lr(U)^{-2}dU + d\tilde{\theta} \\
dr &= \dot{r}(U)dU \qquad \text{or } \ r = r(U) \\
dt &= -E^{-1}dV + E^{-1}Ld\theta + E^{-1}d\rho(r(U)) \\
&= -E^{-1}dV + E^{-1}L^2 r(U)^{-2}dU + E^{-1}Ld\tilde{\theta} + (Ef(r(U))^{-1} - E^{-1}L^2 r(U)^{-2})dU \\
&= -E^{-1}dV + E^{-1}Ld\tilde{\theta} + Ef(r(U))^{-1}dU \ .
\end{aligned} \tag{4.46}$$

Note as a consistency check that the last term is indeed $\dot{t}(U)$, as required. Plugging this into the metric, one finds that dU only appears in the combination $2dUdV$, so that this really is an adapted coordinate system,

$$\begin{aligned}
ds^2_\gamma &= 2dUdV + E^{-2}r(U)^2\dot{r}(U)^2 d\tilde{\theta}^2 + r(U)^2 \sin^2(\tilde{\theta} + L\int r(U)^{-2})d\tilde{\phi}^2 \\
&\quad + \ (\text{other pieces involving } \ dV) \ .
\end{aligned} \tag{4.47}$$

To take the Penrose limit, we drop the other dV pieces and the explicit dependence on coordinates other than U. Here this just concerns $\tilde{\theta}$ which appears explicitly in the argument of the sine. Thus we find that the Penrose limit of the Schwarzschild metric for $L \neq 0$ is

$$d\bar{s}^2 = 2dUdV + E^{-2}r(U)^2\dot{r}(U)^2 d\tilde{\theta}^2 + r(U)^2 \sin^2(L\int r(U)^{-2})d\tilde{\phi}^2 \ . \tag{4.48}$$

For $L = 0$ we have to be a bit more careful because we don't want to zoom in on the geodesic passing through $\tilde{\theta} = 0$ (where there is a coordinate singularity). In that case, we replace $\tilde{\theta} \to \theta_0 + \tilde{\theta}$ with $\theta_0 \neq 0$, and obtain the metric

$$d\bar{s}^2 = 2dUdV + E^{-2}r(U)^2\dot{r}(U)^2 d\tilde{\theta}^2 + r(U)^2 \sin^2\theta_0 d\tilde{\phi}^2 \ . \tag{4.49}$$

For now let us assume that $L \neq 0$ - we will come back to the case $L = 0$ at the end. At this stage the expression for the metric is not particularly enlightning, but at least we see that it is diagonal in Rosen coordinates, and hence it is straightforward to transform it to Brinkmann coordinates. Using (2.89), we see that we need to calculate (we already set $U = u$)

$$A_{11}(u) = (r(u)\dot{r}(u))^{-1}\frac{d^2}{du^2}(r(u)\dot{r}(u)) \tag{4.50}$$

$$A_{22}(u) = (r(u)\sin L\int r(u)^{-2})^{-1}\frac{d^2}{du^2}(r(u)\sin L\int r(u)^{-2}) \ . \tag{4.51}$$

Using (4.40) and (4.41) repeatedly to eliminate $\dot{r}$ and $\ddot{r}$, one finds that

$$A_{11}(u) = -3r(u)^{-1}V'_{eff}(r(u)) - V''_{eff}(r(u)) \tag{4.52}$$

$$A_{22}(u) = -r(u)^{-1}V'_{eff}(r(u)) - L^2 r(u)^{-4} \ . \tag{4.53}$$

Now here is a crucial check on the calculation. We started off with a solution of the vacuum Einstein equations. Hence also the plane wave metric we find in the Penrose limit should be Ricci-flat. But as we know, this means that A_{ab} should be traceless. If we use the explicit expression for $V_{eff}(r)$,

$$V_{eff}(r) = -\frac{mL^2}{r^3} + \frac{L^2}{2r^2} \ , \tag{4.54}$$

we find that indeed

$$A_{11}(u) = -A_{22}(u) = \frac{3mL^2}{r(u)^5} \ . \tag{4.55}$$

Another way of saying (and seeing) this is to note that, written in terms of $f(r)$ rather than $V_{eff}(r)$, the condition $\mathrm{Tr}\, A = 0$ is

$$\mathrm{Tr}\, A = 0 \Leftrightarrow (f(r) - 1)'' = 2r^{-2}(f(r) - 1) \ . \tag{4.56}$$

This is just the Einstein equation for a metric of the form (4.36), which is solved by (4.37).

Thus the Penrose limit of the Schwarzschild metric in Brinkmann coordinates is

$$d\bar{s}^2 = 2dudv + \frac{3mL^2}{r(u)^5}(x_1^2 - x_2^2)du^2 + dx_1^2 + dx_2^2 \quad . \tag{4.57}$$

Notice that we have been able to get this far without ever having to solve explicitly the geodesic equation for $r(u)$.

We can now also analyse the issue of singularities in this metric, i.e. the question to which extent the plane wave limit metric "remembers" the singularity of the Schwarzschild metric. Well, this is clear from the expression for the metric: there will be a singularity if and only if $r(u_0) = 0$ for some u_0, i.e. there will be a singularity precisely when the original geodesic runs into the singularity. Here we see very clearly that the Penrose limit space-time sees the entire null geodesic, not just some small segment of it.

From the standard analysis of the Schwarzschild metric, one knows that the effective potential has one critical point at $r = 3m$, corresponding to an unstable circular photon orbit. The value of $V_{eff}(r)$ at $r = 3m$ is

$$V_{eff}(r = 3m) = \frac{L^2}{54m^2} \quad . \tag{4.58}$$

Thus for sufficiently large angular momentum,

$$L^2 > 27m^2E^2 \quad , \tag{4.59}$$

light rays will be deflected by the black hole. They will never reach the singularity and therefore for this range of parameters the Penrose limit metric is smooth. For $L^2 < 27m^2E^2$, on the other hand, photons are captured by the black hole, will eventually reach the singularity, and the Penrose limit is singular. See Figure 1 for an illustration of this.

Let us take a closer look at the u-dependence of the metric near $r(u) = 0$ (so we are in the range $L^2 < 27m^2E^2$). For small values of r, the dominant term in the differential equation (4.40) for r is (unless $L = 0$)

$$\dot{r} = \sqrt{2m}Lr^{-3/2} \quad . \tag{4.60}$$

This implies that

$$r(u)^5 = (25mL^2/2)u^2 \quad . \tag{4.61}$$

Thus L^2 (and m) drop out of the equation for A_{ab} and the universal behaviour of the metric as $r \to 0$ is

$$\frac{3mL^2}{r(u)^5} = \frac{6}{25}u^{-2} \quad . \tag{4.62}$$

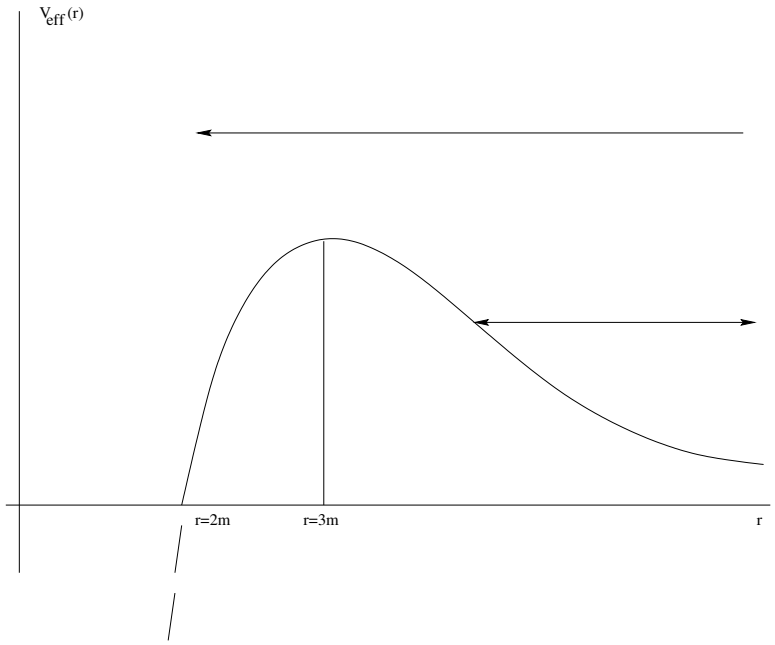

Figure 1: Effective potential for a massless particle. Displayed is the location of the unstable circular orbit at $r = 3m$. A photon with an energy $E^2 < L^2/27m^2$ will be deflected (lower arrow), photons with $E^2 > L^2/27m^2$ will be captured by the black hole.

This $1/u^2$-behaviour of the metric in Brinkmann coordinates appears to be a remarkably "attractive" behaviour for the Penrose limits of singular metrics. We will come back to this in sections 5 and 6 where we will rederive these results and their generalisations to $d > 2$ in a different way.

Finally, let us consider the case $L = 0$. At first there seems to be a puzzle because the above form (4.57) of the metric suggests that the metric for $L = 0$ is flat rather than singular even though photons moving along radial null geodesics clearly run into the singularity. Before trying to understand this, let us first make sure that (4.57) is also valid for $L = 0$. For that we go back to the expression (4.49) for the $L = 0$ metric in Rosen coordinates. Since for $L = 0$ the equation of motion for $r(u)$ is simply

$$\dot{r}^2 = E^2 \quad , \tag{4.63}$$

we see that more explicitly (4.49) can be written as

$$d\bar{s}^2 = 2dUdV + E^2U^2(d\tilde{\theta}^2 + \sin^2\theta_0 d\tilde{\phi}^2) \quad . \tag{4.64}$$

This is obviously just one way of writing the flat metric in Rosen coordinates, and we can therefore conclude that (4.57) is also valid for $L = 0$. So what happened to the singularity? The point is that in the original space-time the geodesic $r(U) = -EU$ (say)

only exists for $U < 0$ and simply ends at $U = 0$. In that sense there is a singularity, even though it seems to disappear after one transforms to Brinkmann coordinates and extends the range of U to $U > 0$.

4.9 Exercises for Section 4

1. Hereditary Properties of Penrose Limits

   (a) Let $g_{\mu\nu}$ be a D-dimensional space-time metric with N linearly independent Killing vectors. Give a lower bound on the number of linearly independent Killing vectors of any Penrose limit of this metric.

   (b) Is "geodesic completeness" a hereditary property of Penrose Limits? What about "geodesic incompleteness"?

   (c) Come up with some other examples of hereditary or non-hereditary properties of Penrose Limits.

2. Penrose Limits of FRW Metrics

   Here is a short-cut to adapted coordinates and the Penrose Limit for FRW metrics. For simplicity consider the spatially flat case where

   $$ds^2 = -dt^2 + a(t)^2(dr^2 + r^2 d\Omega_d^2) \tag{4.65}$$

   and $a(t) \sim t^h$ (for the relation between h and the equation of state parameter w see (5.70) and note that $n = d + 1$ is the number of spatial dimensions).

   (a) Argue that there is a unique Penrose limit, and that it is characterised by a wave profile of the form $A_{ab}(u) = \delta_{ab} A(u)$.

   (b) By going to "conformal time" η, $d\eta = dt/a(t)$, show that the Penrose limit metric in Rosen coordinates is characterised by

   $$\bar{g}_{ij}(U) \sim \delta_{ij} U^{h/h+1} \quad . \tag{4.66}$$

   (c) Show that this implies that in Brinkmann coordinates one has

   $$A_{ab}(u) = -\delta_{ab} \frac{h}{(1+h)^2} u^{-2} \quad . \tag{4.67}$$

3. Penrose Limits and and the Einstein-Matter Equations of Motion

   (a) Consider the Einstein-Hilbert action minimally coupled to a scalar field ϕ (in units in which some suitable multiple of the D-dimensional Newton constant is equal to 1)

   $$S(g_{\mu\nu}, \phi) = \int d^D x \sqrt{g} (R - \tfrac{1}{2} g^{\mu\nu} \partial_\mu \phi \partial_\nu \phi) \quad . \tag{4.68}$$

Show that this action transforms homogeneously under the scaling $g_{\mu\nu} \to \lambda^{-2} g_{\mu\nu}$, $\phi \to \phi$ of the fields,

$$S(\lambda^{-2} g_{\mu\nu}, \phi) = \lambda^{\alpha} S(g_{\mu\nu}, \phi) \quad . \tag{4.69}$$

What is α?

(b) Argue that this implies that the Penrose Limit takes solutions to the equations of motion to solutions to the equations of motion.

(c) What happens if one replaces $R \to \mathrm{e}^{\beta\phi} R$?

(d) What happens if one adds a potential for the scalar fields?

(e) What happens (or: what does one need to do) in the case of Einstein-Maxwell theory?

4. Beyond the Penrose Limit

Starting from (4.24), work out the $\mathcal{O}(\lambda)$ and $\mathcal{O}(\lambda^2)$ corrections to the Penrose Limit plane wave metric.

5 Penrose Limits II: The Covariant Description

Request added December 2024:

Various recent papers make use of the covariant characterisation of the Penrose Limit described in this section. These results were first obtained in references [27], [25]:

- M. Blau, M. Borunda, M. O'Loughlin, G. Papadopoulos, *Penrose Limits and Spacetime Singularities*, Class. Quant. Grav. 21 (2004) L43–L49, `hep-th/0312029`.
- M. Blau, M. Borunda, M. O'Loughlin, G. Papadopoulos, *The universality of Penrose limits near space-time singularities*, JHEP 0407 (2004) 068, `hep-th/0403252`

If you do make use of these results, please do not just refer to these lecture notes but give credit to my collaborators by referring to these original papers.

Thank You!

Even though we have been able to get quite far with the definition of the Penrose Limit of the previous section, there are some things that are quite unsatisfactory about it. In particular, the sequence of coordinate transformations involved in the definition is rather round-about and makes the entire procedure look rather non-covariant.

In particular, while in principle taking the Penrose limit amounts to assigning the wave profile $A_{ab}(u)$ to the intitial data $(g_{\mu\nu}, \gamma)$, after having gone through the sequence of scalings and coordinate transformations required by the standard procedure,

$$\boxed{\begin{array}{ccccc} (ds^2, \gamma) & \overset{(4.16)}{\longrightarrow} & ds^2_\gamma \ (4.17) & \overset{(4.21)}{\longrightarrow} & ds^2_{\gamma,\lambda} \quad (4.22) \\ \Downarrow ??? & & & & \downarrow^{(4.23)} \\ A_{ab}(u) & \overset{(2.84)}{\longleftarrow} & d\bar{s}^2 \ (4.26) & \overset{(4.25)}{\longleftarrow} & \lambda^{-2} ds^2_{\gamma,\lambda} \ (4.24) \end{array}} \tag{5.1}$$

one has pretty much lost track of what sort of information about the original space-time the Penrose limit plane wave metric actually contains.

This flow-diagram certainly begs the question if there is not a more direct (and geometrically appealing) route from (ds^2, γ) to $A_{ab}(u)$. The argument on the covariance of the Penrose Limit shows that there is indeed something covariant lurking behind that definition, but the precise nature of the Penrose limit and the extent to which it encodes generally covariant properties of the original space-time have remained somewhat unclear and elusive so far.

We will now improve on this situation by deducing a *completely covariant characterisation and definition of the Penrose limit* wave profile matrix $A_{ab}(u)$ which does not

require taking any limit and which shows that $A_{ab}(u)$ directly encodes diffeomorphism invariant information about the original space-time metric. We will also see that this is information about tidal forces (i.e. the size and growth of curvature) along the null geodesic in question.

5.1 Curvature and Penrose Limits

We first establish the relation between the wave profile $A_{ab}(u)$ of the Penrose limit metric and certain components of the curvature tensor of the original metric.

We consider the components $R^i{}_{UjU}$ of the curvature tensor of the metric (4.1) which enter into the geodesic deviation equation (A.15) of the corresponding null geodesic congruence. The first observation is that

$$R^i{}_{UjU} = -(\partial_U \Gamma^i{}_{jU} + \Gamma^i{}_{kU}\Gamma^k{}_{jU}) \tag{5.2}$$

does not depend on the coefficients a and b_i of the metric and only involves U-derivatives of g_{ij}. It follows that these components of the curvature tensor are related to those of the Penrose limit metric by

$$\bar{R}^i{}_{UjU} = R^i{}_{UjU}|_\gamma \tag{5.3}$$

Next we introduce a pseudo-orthonormal frame E^A_μ, $A = (+, -, a)$ for the metric (4.1),

$$ds^2 = 2E^+E^- + \delta_{ab}E^aE^b \ , \tag{5.4}$$

which is parallel along the null geodesic congruence, $\nabla_U E^A_\mu = 0$. We choose $E_+ = \partial_U$ to be tangent to the geodesics. Then it is not difficult to see that E_a has the form

$$E_a = E^i_a \partial_i + E^U_a \partial_U \ , \tag{5.5}$$

where E^a_i is a vielbein for $g_{ij}(U, V, Y^K)$ satisfying

$$\dot{E}_{ai}E^i_b = \dot{E}_{bi}E^i_a \ . \tag{5.6}$$

This condition is independent of a, b_i and only involves U-derivatives of E^a_i. We can thus conclude that the vielbeins $\bar{E}^a_i$ of the Penrose limit metric satisfying the symmetry condition (4.6) can be obtained from the parallel-propagated (5.6) vielbeins of the full metric by restriction to the null geodesic γ,

$$\bar{E}^a_i = E^a_i|_\gamma \ . \tag{5.7}$$

In particular, this provides a geometric interpretation of the, so far somewhat mysterious, symmetry condition (2.82) that arose in the coordinate transformation between Rosen and Brinkmann coordinates.

Combining (4.5) with (5.3) and (5.7), and using (5.5) we thus obtain the key result that the frequency matrix (wave profile) $A_{ab}(u)$ of the Penrose limit metric is

$$A_{ab}(u) = -(R_{i+j+}E^i_a E^j_b)|_\gamma \quad . \tag{5.8}$$

As a consequence, even though we had to appeal to Penrose adapted coordinates (4.1) to implement the standard definition (4.26) of the Penrose limit, we now arrive at a *fully covariant characterisation and definition of the Penrose limit*. While this is implied by what we have already said, it may be worth reiterating it:

Given a null geodesic γ, one constructs a pseudo-orthonormal parallel propagated coframe (E_+, E_-, E_a) with $E_+ = \partial_u$ tangent to the null geodesic and E_- characterised by $g(E_-, E_-) = 0$ and $g(E_+, E_-) = 1$. Then the Penrose limit is the plane wave metric characterised by the wave profile

$$A_{ab}(u) = -R_{a+b+}|_\gamma \quad , \tag{5.9}$$

which is determined uniquely up to u-independent orthogonal transformations.

5.2 Penrose Limits and Geodesic Deviation

The above shows that the Penrose limit contains generally covariant information about the original metric. We now clarify precisely what this information is. Namely, we will see that $A_{ab}(u)$ can be characterised as the *transverse null geodesic deviation matrix* [40, Section 4.2] of the original metric,

$$\frac{d^2}{du^2}Z^a = A_{ab}(u)Z^b \quad , \tag{5.10}$$

with Z the transverse geodesic deviation vector. This implies that geodesic deviation along the selected null geodesic in the original space-time is identical to null geodesic deviation in the corresponding Penrose limit plane wave metric (2.76) and shows that it is precisely this information about the original metric which the Penrose limit encodes.

The equivalence of (5.10) and the characterisation (5.9) of $A_{ab}(u)$ obtained in [27] is a standard result in the theory of null congruences. This is not only a geometrically transparent but frequently also a calculationally efficient way of determining the wave profile $A_{ab}(u)$ in practice, and for this reason I will explain this procedure in some detail in Appendix C.

Here I will give a more elementary and heuristic argument based on the general geodesic deviation equation (A.15) for a family or congruence of geodesics,

$$\frac{D^2}{D\tau^2}\delta x^\mu = R^\mu{}_{\nu\lambda\rho}\dot{x}^\nu \dot{x}^\lambda \delta x^\rho \quad , \tag{5.11}$$

If one had a timelike geodesic congruence, then one would not really be interested in the component of the deviation (or connecting) vector in the timelike direction, i.e. along the timelike geodesic itself. It is therefore then natural to consider deviation vectors which are spacelike and orthogonal to the congruence, $g_{\mu\nu}\dot{x}^\mu \delta x^\nu = 0$.

In the case of null congruences it is not enough to say "orthogonal to the congruence" as this, due to the peculiarities of Lorentzian geometry, still allows components tangent to the null congruence. Thus in this case the relevant components of the geodesic deviation equation involve geodesic deviation vectors with $d = D - 2$ components that are orthogonal both to the null geodesic and to the complementary null direction.

A further simplification arises if one refers the deviation vectors to a parallel orthonormal basis, as in (5.4) above. In such a basis, covariant derivatives reduce to ordinary derivatives, and thus the geodesic deviation equation takes the harmonic oscillator form

$$\frac{d^2}{du^2} Z^a = E^a_\nu E^\mu_b R^\nu{}_{\lambda\rho\mu} \dot{x}^\lambda \dot{x}^\rho Z^b = -R^a{}_{+b+} Z^b \quad . \tag{5.12}$$

This establishes the equivalence of (5.9) and (5.10).

In terms of the data defining a geodesic congruence, the relevant components of the Riemann curvature tensor entering into the above equation can be calculated as

$$A^a_{\ b} = \frac{d}{du} B^a_{\ b} + B^a_{\ c} B^c_{\ b} \quad . \tag{5.13}$$

where

$$B_{ab} = E^\nu_a E^\mu_b \nabla_\mu p_\nu \quad , \qquad p_\nu = g_{\nu\lambda} \dot{x}^\lambda \quad , \tag{5.14}$$

In particular (and this will be useful in later calculations), the trace of B is

$$\mathrm{tr}\, B \equiv B^a_{\ a} = \frac{1}{\sqrt{-g}} \partial_\mu (\sqrt{-g} \dot{x}^\mu) \quad , \tag{5.15}$$

explaining the ubiquity of logarithmic derivatives in the examples to be discussed below.

5.3 Penrose Limits, Geodesic Congruences and Hamilton-Jacobi Equations

Using the geodesic deviation approach to calculate Penrose limits, as outlined above, is obviously a geometrically transparent and appealing way of interpreting the Penrose Limit and determining $A_{ab}(u)$. It is somewhat less economical (economical in the sense of introducing the least amount of additional structure) than the characterisation (5.9) of $A_{ab}(u)$ in terms of the Riemann tensor, which only requires a parallel frame along the original null geodesic and not an entire geodesic congruence. However, it may

nevertheless be a calculationally more efficient approach if one is in a situation where one has a natural candidate geodesic congruence (so that one does not have to construct one first). In this case, the calculation of $A_{ab}(u)$ via geodesic deviation provides a shortcut to the calculation of the relevant components of the Riemann tensor.

Both these covariant characterisations of the Penrose Limit are certainly more elegant than the standard systematic aproach to determining Penrose Limits [12, 13, 14] which not only relies on the existence of some special (twist-free) null geodesic congruence, but also requires other auxiliary constructs like Penrose coordinates (i.e. coordinates adapted to the congruence) and the coordinate transformation from Rosen to Brinkmann coordinates. Nevertheless, this is still frequently a useful way of performing calculations, in particular when combined with the systematic Hamilton-Jacobi approach to constructing adapted coordinates discussed above.

In practice, therefore, the geodesic deviation approach is useful if there is a natural geodesic congruence. Such a null geodesic congruence can be easily constructed whenever one has a solution to the Hamilton-Jacobi equation

$$g^{\mu\nu}\partial_\mu S\partial_\nu S = 0 \tag{5.16}$$

for null geodesics. Indeed, as we have already seen above, setting

$$\dot{x}^\mu = g^{\mu\nu}\partial_\nu S \ , \tag{5.17}$$

one obviously has

$$\dot{x}^\rho\nabla_\rho\dot{x}^\mu = g^{\rho\sigma}g^{\mu\nu}\nabla_\rho\partial_\nu S\partial_\sigma S = \frac{1}{2}g^{\mu\nu}\partial_\nu(g^{\rho\sigma}\partial_\rho S\partial_\sigma S) = 0 \ , \tag{5.18}$$

so that this defines a null geodesic congruence.

In particular, whenever the Hamilton-Jacobi equation can be separated the null geodesic equations become first order and the natural null geodesic congruence is parameterised by the integration constants of these first order equations.

For a geodesic congruence defined by a solution to the Hamilton-Jacobi equation, the equation for B_{ab} (C.8), is

$$B_{ab} = E^\mu_a E^\nu_b \nabla_\mu\partial_\nu S \tag{5.19}$$

and the equation for the trace of B, (5.15), is

$$B^a{}_a = \nabla^\mu\partial_\mu S \ . \tag{5.20}$$

Therefore B_{ab} is the covariant Hessian of the HJ function S evaluated in a parallel frame and its trace is the Laplacian of the Hamilton-Jacobi function with respect to the space-time metric. Since B_{ab} is manifestly a symmetric matrix in this case (away from singularities of the HJ function) the corresponding null geodesic congruence is twist free.

5.4 The Penrose Limits of a Static Spherically Symmetric Metric

To illustrate the geodesic deviation approach to Penrose limits, we now show how to quickly determine all the Penrose limits of a static spherically symmetric metric. We start with the metric in Schwarzschild-like coordinates (the extension to isotropic coordinates, brane-like metrics with extended world volumes, or null metrics is straightforward and is mentioned in Appendix D),

$$\begin{aligned} ds^2 &= -f(r)dt^2 + g(r)dr^2 + r^2 d\Omega_d^2 \\ d\Omega_d^2 &= d\theta^2 + \sin^2\theta d\Omega_{d-1}^2 \ . \end{aligned} \tag{5.21}$$

Taking the Penrose limit entails first choosing a null geodesic. Because of the rotational symmetry in the transverse direction, without loss of generality we can choose the null geodesic to lie in the (t, r, θ)-plane. The symmetries reduce the geodesic equations to the first integrals

$$\begin{aligned} \dot{t} &= E/f(r) \\ \dot{\theta} &= L/r^2 \\ \dot{r}^2 &= E^2/f(r)g(r) - L^2/g(r)r^2 \ , \end{aligned} \tag{5.22}$$

where E and L are the conserved energy and angular momentum respectively. This defines a natural geodesic congruence, corresponding to the Hamilton-Jacobi function

$$S = -Et + L\theta + R(r) \tag{5.23}$$

with

$$(\frac{d}{dr}R)^2 = gf^{-1}E^2 - r^{-2}gL^2 \tag{5.24}$$

and allows us to calculate B_{ab}.

We first construct the parallel frame. We have

$$E_+ = \dot{r}\partial_r + \dot{t}\partial_t + \dot{\theta}\partial_\theta \ , \qquad E_+|_\gamma = \partial_u \ , \tag{5.25}$$

and we will not need to be more specific about E_-. The transverse components are $E_a = (E_1, E_{\hat{a}})$, with $\hat{a} = 2, \ldots, d$ referring to the transverse $(d-1)$-sphere. Since there is no evolution in these directions, the $E_{\hat{a}}$ are the obvious orthonormal frame components

$$E_{\hat{a}} = \frac{1}{r\sin\theta} e_{\hat{a}} \tag{5.26}$$

with $e_{\hat{a}}$ an orthonormal coframe for $d\Omega_{d-1}^2$. The transverse $SO(d)$-symmetry implies

$$\begin{aligned} B_{1\hat{a}} &= A_{1\hat{a}} = 0 \\ B_{\hat{a}\hat{b}}(u) &= B(u)\delta_{\hat{a}\hat{b}} \\ A_{\hat{a}\hat{b}}(u) &= A(u)\delta_{\hat{a}\hat{b}} \ . \end{aligned} \tag{5.27}$$

Moreover, because of (5.15) we have

$$B_{11}(u) = \nabla_\mu \dot{x}^\mu(u) - (d-1)B(u) \tag{5.28}$$

so that we only have to calculate $B_{22}(u) = B(u)$, for which one finds (with, say, $e_2 = \partial_\phi$)

$$B_{22} = \Gamma^\phi_{\phi r}\dot{r} + \Gamma^\phi_{\phi\theta}\dot{\theta} = \partial_u \log(r(u)\sin\theta(u)) \ , \tag{5.29}$$

or

$$B_{\hat{a}\hat{b}}(u) = \delta_{\hat{a}\hat{b}}\partial_u \log(r(u)\sin\theta(u)) \ . \tag{5.30}$$

Since

$$\mathrm{tr}\, B = \partial_u \log\left(\dot{r}r^d \sin^{d-1}\theta\sqrt{f(r)g(r)}\right) \tag{5.31}$$

one finds

$$B_{11}(u) = \partial_u \log\left(r(u)\dot{r}(u)\sqrt{f(r(u))g(r(u))}\right) \ . \tag{5.32}$$

Now, in general, for $B_{ab}(u)$ of the logarithmic derivative form

$$B_{ab}(u) = \delta_{ab}\partial_u \log K_a(u) \tag{5.33}$$

one has

$$A_{ab}(u) = \delta_{ab}K_a(u)^{-1}\partial_u^2 K_a(u) \tag{5.34}$$

and therefore

$$\begin{aligned} A_{11} &= (r\dot{r}\sqrt{fg})^{-1}\partial_u^2(r\dot{r}\sqrt{fg}) \\ A_{\hat{a}\hat{b}} &= \delta_{\hat{a}\hat{b}}(r\sin\theta)^{-1}\partial_u^2(r\sin\theta) \ . \end{aligned} \tag{5.35}$$

In particular, for the transverse components one has the universal result

$$A_{\hat{a}\hat{b}}(u) = \delta_{\hat{a}\hat{b}}(\frac{\ddot{r}(u)}{r(u)} - \frac{L^2}{r(u)^4}) \ . \tag{5.36}$$

Even though no knowledge of the components E_- and E_1 was required to determine the transverse null geodesic deviation matrix $A_{ab}(u)$, it is occasionally useful to know them explicitly anyway. They can be chosen to lie in the (r,t,θ)-hyperplane. It is convenient to expand them in the basis $(\partial_t, \partial_\theta, \partial_u)$ as

$$E_{1,-} = E^t_{1,-}\partial_t + E^\theta_{1,-}\partial_\theta + E^u_{1,-}\partial_u \ . \tag{5.37}$$

All but one of these coefficients are determined by the algebraic constraints

$$g(E_+, E_1) = g(E_-, E_1) = g(E_-, E_-) = 0 \qquad g(E_+, E_-) = g(E_1, E_1) = 1 \ . \tag{5.38}$$

The remaining coefficient is then determined by the condition that $\nabla_u E_{1,-} = 0$.

With the notation

$$\begin{aligned} \Delta(r) &= (E^2 r^2 - L^2 f(r))^{1/2} \\ \Omega(r) &= \int \frac{r}{\Delta(r)} \end{aligned} \tag{5.39}$$

one finds the following result for E_1,

$$\begin{aligned} E_1^t &= \frac{L}{\Delta} \\ E_1^\theta &= \frac{E}{\Delta} \\ E_1^u &= \frac{E}{L}\left(\Omega - \frac{r^2}{\Delta}\right) \end{aligned} \tag{5.40}$$

and for E_-,

$$\begin{aligned} E_-^t &= -\frac{E\Omega}{\Delta} \\ E_-^\theta &= \frac{1}{L} - \frac{E^2\Omega}{L\Delta} \\ E_-^u &= -\frac{1}{2}\frac{E^2}{L^2}\left(\Omega - \frac{r^2}{\Delta}\right)^2 + \frac{r^2 f}{2\Delta^2} \quad . \end{aligned} \tag{5.41}$$

These expressions simplify somewhat for Schwarzschild like metrics with $f(r)g(r) = 1$. In particular, since then $\dot{r}^2 = \Delta^2/r^2$, one has $\Omega(r(u)) = u$.

5.5 Schwarzschild Plane Waves and their Scale-Invariant Near-Singularity Limits

As a concrete example we will now reconsider the Penrose limits of the $D = (d+2)$-dimensional Schwarzschild metric, $D \geq 4$, already discussed in section 4.8 in terms of adapted coordinates. Thus the metric is

$$ds^2 = -f(r)dt^2 + f(r)^{-1}dr^2 + r^2 d\Omega_d^2 \tag{5.42}$$

where[14]

$$f(r) = 1 - \frac{2m}{r^{d-1}} \quad . \tag{5.43}$$

In this case we have (cf. (4.40,4.41))

$$\dot{r}^2 = E^2 - L^2 f(r) r^{-2} \equiv E^2 - 2V_{eff}(r) \quad , \tag{5.44}$$

[14]Note that m is not the ADM mass for $d \neq 2$.

and

$$\ddot{r} = -V'_{eff}(r) \ . \tag{5.45}$$

It now follows straightforwardly that

$$\begin{aligned} A_{22}(u) = \ldots = A_{dd}(u) &= \frac{\ddot{r}(u)}{r(u)} - \frac{L^2}{r(u)^4} \\ &= -\frac{(d+1)mL^2}{r(u)^{d+3}} \ , \end{aligned} \tag{5.46}$$

where $r(u)$ is the solution to the geodesic (effective potential) equation (5.44). Moreover, since the Schwarzschild metric is a vacuum solution, this is a vacuum plane wave with $\mathrm{Tr}\, A(u) = \delta^{ab} A_{ab}(u) = 0$, so that

$$A_{11}(u) = \frac{(d+1)(d-1)mL^2}{r(u)^{d+3}} \ . \tag{5.47}$$

There are a number of facts that can be readily deduced from this result:

- First of all, we see that the Penrose limit of the Schwarzschild metric is flat for radial null geodesics, $L = 0$. We could have anticipated this on general grounds because in this case the setting is $SO(d+1)$-invariant, implying $A_{ab}(u) \sim \delta_{ab}$, which is incompatible with $\mathrm{Tr}\, A = 0$ unless $A_{ab}(u) = 0$. This should, however, not be interpreted as saying that the radial Penrose limit of the Schwarzschild metric is Minkowski space. Rather, the space-time "ends" at the value of u at which $r(u) = 0$, say at $u = 0$. Perhaps the best way of thinking of this metric is as a time-dependent orbifold of the kind studied recently in the context of string cosmology (see e.g. [43] and references therein).

- We also learn that the Penrose limit is a symmetric plane wave (u-independent wave profile) if $r(u) = r_*$ is a null geodesic at constant r. Setting $\ddot{r} = \dot{r} = 0$, one finds that

  $$r_*^{d-1} = (d+1)m \tag{5.48}$$

  (the familiar $r = 3m$ photon orbit for $D = 4$), with the constraint

  $$r_*^2 = \frac{d-1}{d+1}\frac{L^2}{E^2} \tag{5.49}$$

  on the ratio L/E. Precisely because they lead to symmetric plane waves, with a well-understood string theory quantisation, such constant r Penrose limits have attracted some interest in the literature.

- Moreover we see that the resulting plane wave metric for $L \neq 0$ is singular iff the original null geodesic runs into the singularity, which will happen for sufficiently small values of L/E.

We will now take a closer look at the u-dependence of the wave profile near the singularity $r(u) = 0$. We thus consider sufficiently small values of L/E in order to avoid the angular momentum barrier.

For small values of r, the dominant term in the differential equation (5.44) for r is (unless $L = 0$, a case we already dealt with above)

$$\dot{r} = \sqrt{2m} L r^{-(d+1)/2} \quad . \tag{5.50}$$

This implies that

$$r(u)^{d+3} = \frac{mL^2(d+3)^2}{2} u^2 \quad . \tag{5.51}$$

Thus the behaviour of the Penrose limit of the Schwarzschild metric as $r \to 0$ is

$$A_{11}(u) = -\omega'^2_{SS}(d) u^{-2} \tag{5.52}$$

and

$$A_{22}(u) = \ldots = A_{dd}(u) = -\omega^2_{SS}(d) u^{-2}, \tag{5.53}$$

with frequencies

$$\omega'^2_{SS}(d) = -\frac{2(d^2-1)}{(d+3)^2} \quad . \tag{5.54}$$

and

$$\omega^2_{SS}(d) = \frac{2(d+1)}{(d+3)^2} \quad . \tag{5.55}$$

We note the following:

- First of all, in this limit one finds a singular scale-invariant homogeneous plane wave of the type (3.21) discussed in section 3.3. This behaviour has been found before in a variety of stringy and cosmological contexts [14, 44, 45]. As we will see later, this scale invariance of the near-singularity Penrose limit can be attributed to the power-law scaling behaviour of the near-singularity metrics.

- Moreover, the dependence on L and m has dropped out. The metric thus exhibits a universal behaviour near the singularity which depends only on the space-time dimension $D = d+2$, but neither on the mass of the black hole nor on the angular momentum of the null geodesic used to approach the singularity. For example, for $D = 4$ one has

$$\omega^2_{SS}(d = 2) = \frac{6}{25} \quad . \tag{5.56}$$

- The frequencies are bounded by

$$\omega'^2_{SS}(d) < 0 < \omega^2_{SS}(d) < \frac{1}{4} \quad . \tag{5.57}$$

- Finally, we note that the above result is also valid for (A)dS black holes since the presence of a cosmological constant is irrelevant close to the singularity.

As another example we consider the Penrose limit of the $D = (n+1)$-dimensional FRW metric

$$ds^2 = -dt^2 + a(t)^2(dr^2 + f_k(r)^2 d\Omega_{n-1}^2) \ , \tag{5.58}$$

where $f_k(r) = r, \sin r, \sinh r$ for $k = 0, +1, -1$ respectively. Some aspects of this example were already the subject of Exercise 2 in section 4.9. Here we will give a more complete discussion.

Since the spatial slices are maximally symmetric, up to isometries there is a unique null geodesic and hence a unique Penrose limit. So without loss of generality we shall consider null geodesics which have vanishing angular momentum on the transverse sphere.

Then, with a suitable scaling of the affine parameter, the null geodesic equations can be written as

$$\frac{d}{du}t(u) = \pm a(t(u))^{-1} \ , \qquad \frac{d}{du}r(u) = a(t(u))^{-2} \tag{5.59}$$

(and in what follows, we choose the upper sign in the first equation). Thus

$$E_+ = \partial_u = a^{-1}\partial_t + a^{-2}\partial_r \ , \tag{5.60}$$

and this can be extended to a parallel pseudo-orthonormal frame by

$$\begin{aligned} E_- &= \frac{1}{2}(-a\partial_t + \partial_r) \\ E_a &= (af_k)^{-1}\hat{e}_a \ , \end{aligned} \tag{5.61}$$

where $\hat{e}_a$ is an orthonormal frame for $d\Omega_d^2$, $d = n-1$.

The transverse rotational symmetry implies that $B_{ab}(u) = B(u)\delta_{ab}$ and $A_{ab}(u) = A(u)\delta_{ab}$. Therefore, to determine $B(u)$ it suffices to compute the trace of $B_{ab}(u)$,

$$\mathrm{tr}\, B = \partial_u \log\left(a^{n-1} f_k^{n-1}\right) \ , \tag{5.62}$$

implying

$$B(u) = \partial_u \log\big(af_k\big) \ . \tag{5.63}$$

Using $\frac{d^2}{dr^2}f_k = -kf_k$, one finds

$$A_{ab}(u) = \delta_{ab}A(u) = \delta_{ab}\left(\frac{\ddot{a}(u)}{a(u)} - \frac{k}{a(u)^4}\right) \ . \tag{5.64}$$

This is the precise analogue of the expression (5.36) obtained in the static spherically symmetric case, the spatial curvature k now playing the role of the angular momentum L^2.

This can now be rewritten in a variety of ways to obtain insight into the properties of this FRW plane wave. For example, writing this in terms of t-derivatives (in order to make use of the Friedmann equations), we find

$$A(u(t)) = \frac{1}{a(t)^2}\left(\frac{a''(t)}{a(t)} - \frac{k + a'(t)^2}{a(t)^2}\right) \ . \tag{5.65}$$

where $a(t)$ is determined by the Einstein (Friedmann) equations, $u(t)$ by $du = a(t)dt$, and $a' = \frac{d}{dt}a$. The Friedmann equations

$$\begin{aligned} \frac{a'(t)^2 + k}{a(t)^2} &= \frac{16\pi G}{n(n-1)}\rho(t) \\ \frac{a''(t)}{a(t)} &= -\frac{8\pi G}{n(n-1)}[(n-2)\rho(t) + nP(t)] \ , \end{aligned} \tag{5.66}$$

imply

$$\frac{a'(t)^2 + k}{a(t)^2} - \frac{a''(t)}{a(t)} = \frac{8\pi G}{(n-1)}[\rho(t) + P(t)] \ , \tag{5.67}$$

so that one finds that the wave profile of the FRW plane wave can be written compactly as

$$A(u) = -\frac{8\pi G}{n-1}\frac{\rho(u) + P(u)}{a(u)^2} \ . \tag{5.68}$$

One immediate consequence is that the Penrose limit is flat if and only if $\rho + P = 0$, corresponding to having as the only matter content a cosmological constant. This is in agreement with the result [14] that every Penrose limit of a maximally symmetric space-time is flat.

We will now study the behaviour of $A(u)$ near a singularity, and to be specific we choose the usual equation of state

$$P(t) = w\rho(t) \ . \tag{5.69}$$

We consider $w > -1$ ($w = -1$ would correspond to the case $\rho + P = 0$ already dealt with above) and introduce the positive parameter

$$h(n, w) = \frac{2}{n(1+w)} \tag{5.70}$$

and the positive constant (constant by the continuity equation for ρ)

$$C_h = \frac{16\pi G}{n(n-1)}\rho(t)a(t)^{2/h} \ , \tag{5.71}$$

in terms of which the Friedmann equations read

$$a'(t)^2 = C_h a(t)^{(2h-2)/h} - k \tag{5.72}$$

$$a''(t) = \tfrac{h-1}{h}C_h a(t)^{(h-2)/h} \ . \tag{5.73}$$

Thus the universe is decelerating for $0 < h < 1$ and accelerating for $h > 1$, the critical case $h = 1$ corresponding to $w_c = -1 + 2/n$ (the familiar dark energy threshold $w_c = -1/3$ for $n = 3$).

We first consider the case $k = 0$. In that case one has

$$a(t) \sim t^h \quad , \tag{5.74}$$

and therefore

$$a(u) \sim u^{h/h+1} \quad . \tag{5.75}$$

It then follows immediately from (5.64) that, more explicitly, the u-dependence of $A(u)$ is[15]

$$A(u) = -\omega^2_{FRW}(h, k = 0)u^{-2} \quad , \tag{5.76}$$

where

$$\omega^2_{FRW}(h, k = 0) = \frac{h}{(1 + h)^2} \quad . \tag{5.77}$$

We see that the Penrose limit of a spatially flat FRW universe with equation of state $P = w\rho$ is exactly a singular homogeneous plane wave of the type (3.21).

The frequency square $\omega^2_{FRW}(h, k = 0)$ has the following properties:

- Since
$$\omega^2_{FRW}(h, k = 0) = \omega^2_{FRW}(1/h, k = 0) \quad , \tag{5.78}$$
for every accelerating (inflating) solution of the $k = 0$ Friedmann equations there is precisely one decelerating solution with the same Penrose limit. The self-dual point $h = 1$ corresponds to the linear time-evolution $a(t) \sim t$.

- The frequency squares are again bounded by
$$\omega^2_{FRW}(h, k = 0) \leq \frac{1}{4} \quad , \tag{5.79}$$
with equality attained for $h = 1$.

- Curiously, the frequencies obtained in the Penrose limit of the Schwarzschild metric (in all but one of the directions) are precisely those of a dust-filled FRW universe, $P = w = 0$, of the same dimension $n = d + 1$,
$$\omega^2_{SS}(d) = \omega^2_{FRW}(h, k = 0) \quad , \tag{5.80}$$
e.g. $6/25$ for $n = 3$.

[15] This generalises the result reported in [14].

It is clear that for $k = 0$, when only the first term in (5.64) is present, this homogeneous u^{-2}-behaviour is a consequence of the exact power-law behaviour of $a(t)$ and hence $a(u)$. Let us now consider what happens for $k \neq 0$, when there is a competition between the two terms in (5.64) as one approaches the singularity.

One might like to argue that, even for $k \neq 0$, one finds the same behaviour provided that the matter term dominates over the curvature term in the Friedmann equation (5.72) as $a \to 0$. This happens for $0 < h < 1$, and this argument is correct as one can also see that in this range the first term in (5.64), proportional to u^{-2}, indeed dominates over the second (curvature) term which (cf. (5.75)) is proportional to $u^{-4h/(h+1)}$. Thus for $0 < h < 1$ the near-singularity limit of the FRW plane wave is a homogeneous plane wave with k-independent frequencies (5.77),

$$0 < h < 1 : \quad \omega^2_{FRW}(h,k) = \omega^2_{FRW}(h,k=0) = \frac{h}{(1+h)^2} \ . \tag{5.81}$$

Now let us look at what happens as one passes from a decelerating to a critical ($h = 1$) and then accelerating ($h > 1$) universe. First of all, for $h = 1$, both terms on the right hand side of the Friedmann equation (5.72) contribute equally (they are constant), and correspondingly both terms in (5.64) are proportional to u^{-2}. Thus one finds a homogeneous plane wave, but with a curvature-induced shift of the frequency,

$$h = 1 : \quad \omega^2_{FRW}(h=1,k) = \omega^2_{FRW}(h=1,k=0) + kc^2 = \frac{1}{4} + kc^2 \tag{5.82}$$

for some constant c. In particular, in the spatially closed case $k = +1$ (this requires $C_h > 1$), one now finds frequency squares that are larger than $1/4$. This is a borderline behaviour in the sense that, as can easily be seen from (5.72), the initial singularity for $k = +1$ ceases to exist for $h > 1$.

It thus remains to discuss the case $k = -1$ and $h > 1$. Given the previous discussion, one might be tempted to think that now the second term in (5.64) will dominate over the first, leading to a non-homogeneous and more singular $u^{-4h/(h+1)}$-behaviour. This is, however, not the case, as (5.75) now represents the leading behaviour at large $a(u)$. At small $a(u)$, the leading behaviour is, exactly as for $h = 1$, determined by the constant curvature term in (5.72). Thus even in this case one finds a singular homogeneous plane wave, with frequency

$$h > 1 : \quad \omega^2_{FRW}(h,k=-1) = \frac{1}{4} - c^2 \tag{5.83}$$

once again bounded from above by $1/4$.

5.7 Exercises for Section 5

1. Curvature and Parallel Frames in Adapted Coordinates

   (a) Verify that (5.2) has the properties claimed in the subsequent paragrpah.

   (b) Verify (5.5) and (5.6).

2. Covariance and Hereditary Properties of the Penrose Limit revisited

   Analyse the covariance and hereditary properties of Penrose Limits, discussed in sections 4.5 and 4.6, from the present covariant point of view. Which properties are now more manifest? Which still require a seperate proof?

6 The Universality of Penrose Limits of Power-Law Type Singularities

In the previous section we have presented some evidence for a remarkable

> **Conjecture:** Penrose limits of physically reasonable space-time singularities are singular homogeneous plane waves with wave profile $A_{ab}(u) \sim u^{-2}$.

In this section we will show how to prove this conjecture for a very large class of physical singularities of spherically symmetric type. We will in the process also see some examples of "extreme" stress-energy tensors that give rise to a different behaviour.

6.1 Szekeres-Iyer Metrics

The scale-invariance of the Penrose limit (geodesic deviation) that we have found in the above examples appears to reflect a power-law scaling behaviour of the metric near the singularity. Thus to assess the generality of this kind of result, one needs to enquire about the generality of space-time singularities exhibiting such a power-law behaviour.

In [46] (see also [47]), in the context of investigations of the Cosmic Censorship Hypothesis, Szekeres and Iyer studied a large class of four-dimensional spherically symmetric metrics they dubbed "metrics with power-law type singularities". Such metrics encompass practically all explicitly known singular spherically symmetric solutions of the Einstein equations, in particular all the FRW metrics, Lemaître-Tolman-Bondi dust solutions, cosmological singularities of the Lifshitz-Khalatnikov type, as well as other types of metrics with null singularities. On the other hand, this class of metrics does prominently *not* include the BKL metrics [48] describing the chaotic oscillatory approach to a spacelike singularity.

In "double-null form", these metrics (in $d+2$ dimensions) take the form

$$ds^2 = -\mathrm{e}^{A(U,V)} dU dV + \mathrm{e}^{B(U,V)} d\Omega_d^2 \ , \tag{6.1}$$

where $A(U,V)$ and $B(U,V)$ have expansions

$$\begin{aligned} A(U,V) &= p \ln x(U,V) + \text{regular terms} \\ B(U,V) &= q \ln x(U,V) + \text{regular terms} \end{aligned} \tag{6.2}$$

near the singularity surface $x(U,V) = 0$.

Generically, the residual coordinate transformations $U \to U'(U)$, $V \to V'(V)$ preserving the form of the metric (6.1) can be used to make $x(U,V)$ linear in U and V,

$$x(U,V) = kU + lV \ , \qquad k, l = \pm 1, 0 \ , \tag{6.3}$$

with $\eta = kl = 1, 0, -1$ corresponding to spacelike, null and timelike singularities respectively. This choice of gauge essentially fixes the coordinates uniquely, and thus the "critical exponents" p and q contain diffeomorphism invariant information.

The Schwarzschild metric, for example, has

$$\text{Schwarzschild}: \qquad p = \frac{1-d}{d} \qquad q = \frac{2}{d} \ , \tag{6.4}$$

as is readily seen by expanding the metric near the singularity and going to tortoise coordinates.

Likewise, decelerating cosmological FRW metrics,

$$a(t) \sim t^h \qquad 0 < h < 1 \ , \tag{6.5}$$

where

$$h = \frac{2}{(d+1)(1+w)} \ , \tag{6.6}$$

with w the equation of state parameter, $P = w\rho$, have

$$\text{FRW}: \qquad p = q = \frac{2h}{1-h} \ , \tag{6.7}$$

as can be seen by going to what is known as "conformal time" in cosmology.

We will focus on the behaviour of these geometries near the singularity at $x = 0$, where the metric is

$$ds^2 = -x^p dU dV + x^q d\Omega_d^2 \ . \tag{6.8}$$

For generic situations this leading behaviour is sufficient to discuss the physics near the singularity. In certain special cases, for particular values of p, q or for null singularities, this leading behaviour cancels in certain components of the Einstein tensor and the subleading terms in the above metric become important for a full analysis of the singularities [46, 47]. The analysis then becomes more subtle and we will not discuss these cases here. In the following we will consider exclusively the metric (6.8) which, for $\eta \neq 0$ and generic values of p and q, captures the dominant behaviour of the physics near the singularity.

As shown in detail in [49], typical supergravity solitons (interesecting branes etc.) have singularities of power-law type where instead of one transverse space characterised by one Kasner exponent q one has a near-singularity metric with multiple transverse spaces of the form

$$ds^2 = -x^p dU dV + \sum_i x^{q_{(i)}} ds^2_{(i)} \ . \tag{6.9}$$

Even though here we will specifically only consider spherically symmetric metrics, much of what we do in the following can be extended to such more general metrics with singularities of power-law type.

Returning to the spherically symmetric case, for $\eta \neq 0$ we define $y = kU - lV$ and choose $k = \eta l = 1$. Then the metric takes the form

$$ds^2 = \eta x^p dy^2 - \eta x^p dx^2 + x^q d\Omega_d^2 \ . \tag{6.10}$$

With the further definition $r = x^{q/2}$ (for $q \neq 0$), this has the standard form of a spherically symmetric metric. We will come back to this below in order to be able to make direct use of the analysis of section 5.4.

For $\eta = 0$, on the other hand, we could choose $x = U$, $y = -V$, so that the metric is

$$ds^2 = x^p dx dy + x^q d\Omega_d^2 \ , \tag{6.11}$$

which has the form of the spherically symmetric null metrics analysed in Appendix D. We will focus on $\eta \neq 0$ in the following.

6.2 Null Geodesics of Szekeres-Iyer Metrics

In terms of the conserved momenta P and L associated with y and, say, the colatitude θ of the d-sphere,

$$d\Omega_d^2 = d\theta^2 + \sin^2\theta d\Omega_{d-1}^2 \ , \tag{6.12}$$

in particular

$$x^q \dot{\theta} = L \ , \tag{6.13}$$

the null geodesic condition is equivalent to

$$\dot{x}^2 = P^2 x^{-2p} + \eta L^2 x^{-p-q} \ , \tag{6.14}$$

To understand the null geodesics near $x = 0$, we begin by extracting as much information as possible from this equation, recalling that due to the expansion around $x = 0$ we can only trust the leading behaviour of this equation as $x \to 0$.

Unless $p = q$, one of the two terms on the right-hand-side of (6.14) will dominate as $x \to 0$, and thus the generic behaviour of a null geodesic near $x = 0$ is identical to that of a geodesic with either $L = 0$ or $P = 0$. In the former case, one finds

$$\text{Behaviour 1:} \qquad x(u) \sim u^{1/(p+1)} \tag{6.15}$$

unless $p = -1$ when $x(u) \sim \exp u$. We are only interested in those geodesics which run into the singularity at $x = 0$ at finite u. This happens only for $p > -1$. In the

latter case, corresponding to null geodesics which asymptotically, as $x \to 0$, behave like geodesics with $P = 0$, we evidently need $\eta = +1$ (a spacelike singularity), which leads to

$$\text{Behaviour 2:} \qquad x(u) \sim u^{2/(p+q+2)} \tag{6.16}$$

unless $p + q = -2$ which again leads to an exponential behaviour. These null geodesics run into the singularity at finite u for $p + q > -2$.

For $\eta = +1$, the situation regarding null geodesics that reach the singularity at finite u is summarised in the following table.

Conditions on (P, L)	Constraints on (p, q)	Behaviour
$P \neq 0, L = 0$	$p > -1$	1
$P = 0, L \neq 0$	$p + q > -2$	2
$P \neq 0, L \neq 0$	$p > q, p > -1$	1
$P \neq 0, L \neq 0$	$p < q, p + q > -2$	2
$P \neq 0, L \neq 0$	$p = q > -1$	$1 = 2$

(6.17)

For $\eta = -1$, the situation is largely analogous, the main difference being that now the second term in (6.14) acts as an angular momentum barrier preventing e.g. geodesics with $L \neq 0$ for $q > p$ from reaching the singularity at $x = 0$. These cases are indicated by a '$-$' in the table below. For the same reason, for $p = q$ one finds the constraint $|P| > |L|$.

Conditions on (P, L)	Constraints on (p, q)	Behaviour
$P \neq 0, L = 0$	$p > -1$	1
$P = 0, L \neq 0$		$-$
$P \neq 0, L \neq 0$	$p > q, p > -1$	1
$P \neq 0, L \neq 0$	$p < q$	$-$
$\lvert P\rvert > \lvert L\rvert$	$p = q > -1$	$1 = 2$

(6.18)

6.3 Penrose Limits of Power-Law Type Singularities

We will now determine the Penrose limits of the Szekeres-Iyer metrics along the null geodesics reaching the singularity $x = 0$ at finite u.

For $\eta \neq 0$ we notice that the metric is simply a special case of a spherically symmetric metric and thus can be treated using the analysis of section 5.4. Indeed, when $q \neq 0$ we can change variables to

$$t = y \ , \qquad r = x^{q/2} \ , \tag{6.19}$$

in terms of which the metric (6.10) takes the form

$$ds^2 = \eta x^p dy^2 - \eta x^p dx^2 + x^q d\Omega^2 \tag{6.20}$$

$$= \eta r^{2p/q} dt^2 - \frac{4\eta}{q^2} r^{2(p-q+2)/q} dr^2 + r^2 d\Omega^2 \ . \tag{6.21}$$

Here the notation of t and r is adapted to the case of $\eta = -1$ where the singularity is timelike and t is time. We will continue to use this notation even for spacelike singularities where t is actually spacelike.

The case $q = 0$ is special, but actually corresponds to what is known as a *shell crossing singularity* [46] which is usually not considered to be a true singularity as the transverse sphere is of constant radius $x^q = 1$. Such singularities arise for instance for certain collisions of spherical dust shells. From here on we will only discuss $q \neq 0$.

Referring to section 5.4 where such a spherically symmetric metric was treated, we can identify

$$f(r) = -\eta r^{2p/q} \tag{6.22}$$

$$g(r) = -\frac{4\eta}{q^2} r^{2(p-q+2)/q}. \tag{6.23}$$

We can now appeal to (5.32, 5.30) to deduce that

$$B_{ab} = \delta_{ab} \partial_u \log(K_a(u)) \tag{6.24}$$

with

$$K_1(u) = \dot{r}(u) r(u)^{2(p+1)/q}$$

$$K_2(u) = r(u) \sin(\theta(u)) \tag{6.25}$$

It follows from the analysis of the previous section that the only possibility of interest for $r(u) = x(u)^{q/2}$ is the power-law behaviour

$$r(u) = u^a \ , \tag{6.26}$$

with

$$\text{Behaviour 1:} \quad p > -1 \quad a = q/2(p+1) \tag{6.27}$$

$$\text{Behaviour 2:} \quad p + q > -2 \quad a = q/(p+q+2) \ . \tag{6.28}$$

Clearly, then, $K_1(u)$ is also a simple power of u. Specifically one has (since we are interested in the logarithmic derivatives of $K_1(u)$, proportionality factors are irrelevant)

$$\text{Behaviour 1:} \quad K_1(u) \sim r(u)$$

$$\text{Behaviour 2:} \quad K_1(u) \sim r(u)^{p/q} \ . \tag{6.29}$$

Thus the corresponding component of $A_{ab}(u)$ is

$$\begin{aligned} \text{Behaviour 1:} \qquad A_{11}(u) &= \frac{\ddot{K}_1(u)}{K_1(u)} = a(a-1)u^{-2} \\ \text{Behaviour 2:} \qquad A_{11}(u) &= \frac{\ddot{K}_1(u)}{K_1(u)} = pa/q(pa/q-1)u^{-2} \quad . \end{aligned} \tag{6.30}$$

and the Penrose limit behaves as a singular homogeneous plane wave in this direction. Since $b(b-1)$ has a minimum $-1/4$ at $b = 1/2$, this leads to the bound

$$\omega_1^2 \leq \frac{1}{4} \quad . \tag{6.31}$$

This is the same range that we found empirically for both the Schwarzschild and FRW plane waves near the singularity.

The behaviour of A_{22} is more subtle due to the dependence of $K_2(u)$ on $\sin\theta(u)$. The general behaviour is as in (5.36), namely

$$A_{22}(u) = \frac{\ddot{r}(u)}{r(u)} - \frac{L^2}{r(u)^4} \quad . \tag{6.32}$$

With the power-law behaviour $r(u) = u^a$, the first term is always proportional to u^{-2}. This term is dominant as $u \to 0$ when $a < 1/2$, while it is the second term that dominates for $a > 1/2$ (and leads to a strongly singular plane wave with profile $\sim u^{-4a}$). In the special case $a = 1/2$, both terms are proportional to u^{-2}. Thus one has, for $L \neq 0$,

$$r(u) = u^a \quad a < \tfrac{1}{2}: \quad A_{22}(u) \to -\omega_2^2 u^{-2} \quad , \qquad \omega_2^2 = a(1-a) < \frac{1}{4} \tag{6.33}$$

$$a = \tfrac{1}{2}: \quad A_{22}(u) \to -\omega_2^2 u^{-2} \quad , \qquad \omega_2^2 = \frac{1}{4} + c^2 L^2 \geq \frac{1}{4} \tag{6.34}$$

$$a > \tfrac{1}{2}: \quad A_{22}(u) \to -L^2 u^{-4a} \quad . \tag{6.35}$$

Here, as in the discussion of the FRW plane wave (5.82), c in the second line is some constant which arises because the second term in (6.32) depends on the overall scale of $r(u)$ whereas the first one obviously does not.

When $p \geq q$ and $\eta \neq 0$, $a = q/2(p+1)$ and thus always $a < 1/2$. On the other hand, when $p < q$ and $\eta = 1$ we see that $a = q/(p+q+2)$ can take on any value, with $a = 1/2$ along the line $q = p+2$ and $a > 1/2$ for $q > p+2$. When $p < q$ and $\eta = -1$ we cannot reach the singularity along a geodesic with $L \neq 0$.

When $L = 0$, only the first term in (6.32) is present, and one thus finds (6.33) for all values of a. Since $L = 0$ implies Behaviour 1, this means $a = q/2(p+1)$. Along the special line $q = 2(p+1)$ one has $a = 1$ and one finds the "flat" Penrose limit $A_{11}(u) = A_{22}(u) = 0$. In particular, this happens for radial null geodesics in the

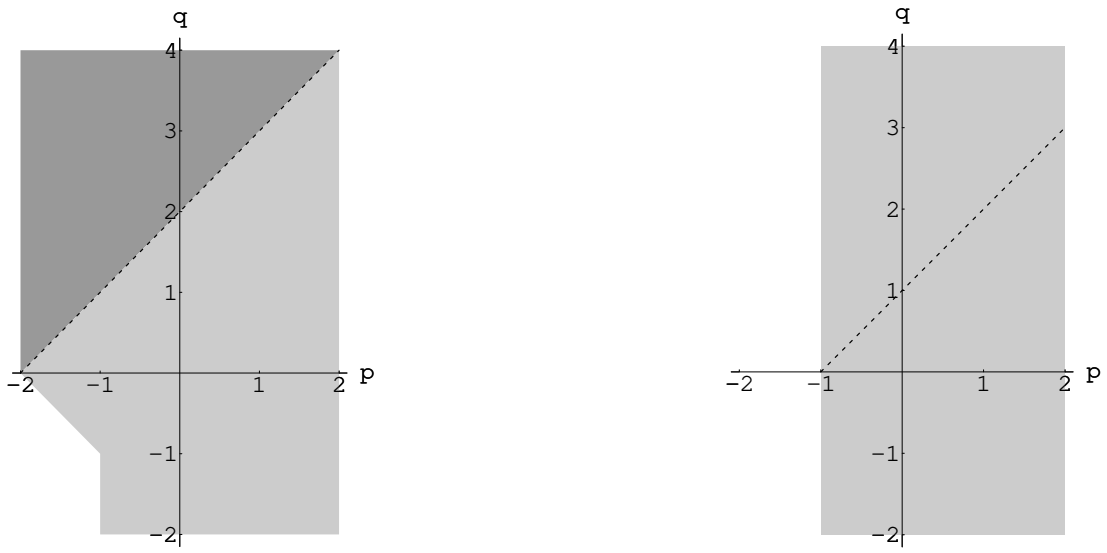

Figure 2: The Penrose Limit Phase Diagram in the $p-q$ plane for (a) spacelike ($\eta = +1$) and (b) timelike ($\eta = -1$) singularities. Singular HPWs arise in the light-shaded regions whereas in the dark-shaded region there are Penrose limits leading to strongly singular (and non-homogeneous) plane waves. (a) The diagram is bounded on the left by the lines $p = -1$ and $p + q = -2$. The dashed line $a = 1/2 \Leftrightarrow q = p + 2$ separates the two regions, and only along that line one finds singular HPWs with $\omega_2^2 > 1/4$. (b) For $\eta = -1$, one finds singular HPWs with $\omega_2^2 \leq 1/4$ for all (p, q) with $p > -1$, $\omega_2^2 = 1/4$ arising only along the dashed line $a = 1/2$ for zero angular momentum, $L = 0$.

Schwarzschild metric ($p = (1-d)/d$ and $q = 2/d$), as already noticed in sections 4.8 and 5.5.

These results are summarised in Figure (2a) for $\eta = 1$ and in Figure (2b) for $\eta = -1$.

6.4 The Role of the Dominant Energy Condition

We thus see that while we frequently obtain a singular HPW with $\omega_a^2 \leq 1/4$ in the Penrose limit, other possibilities do arise. For timelike singularities, the situation is clear:

> Penrose Limits of timelike spherically symmetric singularities of power-law type are singular HPWs with frequency squares bounded from above by $1/4$.

We will now show that for spacelike singularities a different behaviour can occur only when the strict Dominant Energy Condition (DEC) is violated, in particular, that the strongly singular region (the dark-shaded region in Figure (2a)) is excluded by the requirement that the DEC be satisfied but not saturated.

We begin by recalling the definition of the *Dominant Energy Condition* on the stress-energy tensor T^μ_ν (or Einstein tensor G^μ_ν) [40]: for every timelike vector v^μ, $T_{\mu\nu}v^\mu v^\nu \geq 0$, and $T^\mu_\nu v^\nu$ is a non-spacelike vector. This may be interpreted as saying that for any observer the local energy density is non-negative and the energy flux causal.

Next we recall that a stress-energy tensor is said to be of type I [40] if T^μ_ν has one timelike and three (more generally, $d+1$) spacelike eigenvectors. The corresponding eigenvalues are $-\rho$ (ρ the energy density) and the principal pressures P_α, $\alpha = 1, \ldots, d+1$. For a stress-energy tensor of type I, the DEC is equivalent to

$$\rho \geq |P_\alpha| \ . \tag{6.36}$$

We say that the *strict* DEC is satisfied if these are strict inequalities and we will see that the "extremal" matter content (or equation of state) for which at least one of the inequalities is saturated will play a special role in the following.

The Einstein tensor of the metric (6.10) is diagonal (Appendix E),

$$\begin{aligned} G^x_x &= -\tfrac{1}{2}d(d-1)x^{-q} - \tfrac{1}{8}\eta dq((d-1)q+2p)x^{-(p+2)} \\ G^y_y &= -\tfrac{1}{2}d(d-1)x^{-q} + \tfrac{1}{8}\eta dq(2p+4-(d+1)q)x^{-(p+2)} \\ G^i_j &= -\tfrac{1}{2}(d-1)(d-2)\delta^i_j x^{-q} + \tfrac{1}{8}\eta(4p-4q+4qd-d(d-1)q^2)\delta^i_j x^{-(p+2)} \end{aligned} \tag{6.37}$$

and hence clearly of type I. For spacelike singularities, $\eta = +1$, we have energy density $\rho = -G^x_x$, radial pressure $P_r = G^y_y$ and transverse pressures $P_i = G^i_i$, while for $\eta = -1$ the roles of G^x_x and G^y_y are interchanged.

Since for $q > p+2$ the first term in G^x_x and G^y_y dominates over the second term as $x \to 0$, it is obvious that for $q > p+2$ the relation between ρ and P_r becomes extremal as $x \to 0$,

$$G^x_x - G^y_y \to 0 \quad \Leftrightarrow \quad \rho + P_r \to 0 \ . \tag{6.38}$$

Put differently, $q \leq p+2$ is a necessary condition for the strict DEC to hold. Since strongly singular plane waves (the dark-shaded region in Figure (2a)) arise only for $q > p+2$, we have thus established that

> Penrose Limits of spacelike spherically symmetric singularities of power-law type satisfying the strict Dominant Energy Condition are singular HPWs.

Since frequency squares exceeding $1/4$ can only occur along the line $q = p+2$ itself, we can also conclude that

> the resulting frequency squares ω_a^2 are bounded from above by $1/4$ unless one is on the border to an extremal equation of state.

A more detailed analysis of the DEC (as performed for $d = 2$ in [46]), shows that the actual region in which the strict DEC is satisfied (taking into account also the conditions involving the transverse pressures P_i), is more constrained. For spacelike singularities, this is the (infinite) region bounded by the lines

$$q = 2/d, \ \ q = p+2, \ \ q = 2(p+1) \ , \tag{6.39}$$

displayed as the highlighted region A of Figure (3a) (drawn here for $d = 2$). A look at this figure confirms the results we have obtained above.

For timelike singularities, the region where the strong DEC is satisfied is considerably smaller - it is a finite subset of the strip bounded by the lines $q = 0$ and $q = 2/d$, indicated (for $d = 2$) as the highlighted region B of Figure (3b). While of no consequence for the present discussion, the fact that in region B the pressures P_r and P_i cannot simultaneously be positive plays an important role in the discussion of Cosmic Censorship in [46].

The fact that the Penrose limits of timelike singularities always behave as u^{-2}, while in the spacelike case strongly singular Penrose limits can arise (even though only for metrics violating the strict DEC), might give the impression that timelike (naked) singularities are in some sense better behaved than spacelike (censored) singularities. This should rather be viewed as an indication that massless particles are inadequate for probing the geometry of timelike singularities since, for large regions in the (p, q)-parameter space, the angular momentum barrier prevents non-radial null geodesics from reaching (and

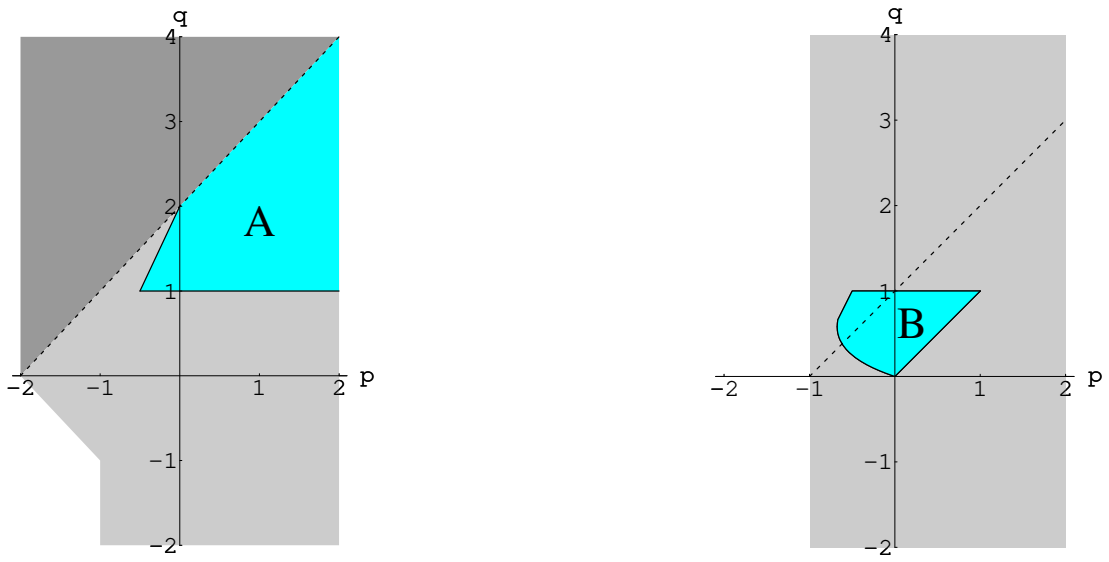

Figure 3: The Penrose Limit + DEC Phase Diagram in the $p-q$ plane for (a) spacelike ($\eta = +1$) and (b) timelike ($\eta = -1$) singularities. In the highlighted regions A and B the DEC is satisfied (but not saturated). (a) the strongly singular (and non-homogeneous) plane waves of the dark-shaded region with extremal equation of state are excluded, and singular HPWs with $\omega_2^2 \geq 1/4$ arise only along the boundary $q = p + 2$ to the extremal equation of state. (b) the Penrose limits are singular HPWs with $\omega_2^2 \leq 1/4$, with $\omega_2^2 = 1/4$ only along the dashed line $q = p + 1$.

hence probing) the singularity. From this point of view, it is much more significant that for spacelike singularities massless particle probes with arbitrary angular momentum all detect homogeneous singular plane waves provided that the strict DEC is satisfied.

We have thus seen that space-time singularities exhibit a remarkably universal homogeneous u^{-2}-behaviour in the Penrose Limit. We have established this in complete generality for timelike singularities of power-law type and have also shown that for spacelike singularities of power-law type, for which more singular Penrose limits are possible, this u^{-2}-behaviour is implied by demanding the strict DEC.

As mentioned in section 6.1, in the case of null singularities of power-law type ($\eta = 0$), studied in [47], some of the leading components of the Einstein tensor vanish and hence one (somewhat trivially) ends up with an extremal equation of state. Thus no interesting constraints arise from imposing the DEC, and using only the leading form (6.11) of the metric cannot be the basis for a full analysis which is more subtle.

Perhaps the main implications of this result are for the study of string theory in singular and/or time-dependent backgrounds. In general, because of the simplifications brought about by the existence of a natural light-cone gauge [5], plane wave (and more general pp-wave) backgrounds provide an ideal setting for studying such problems. Now, as we have seen, the Penrose limits of a large class of singularities are always at least as singular as u^{-2}. Thus "weakly singular" plane waves with profile $\sim u^{-\alpha}$, $\alpha < 2$, while perhaps interesting as toy-models of time-dependent backgrounds in string theory [50, 51], do not actually arise as Penrose limits of standard cosmological or other singularities. Moreover, a strongly singular behaviour with $\alpha > 2$ can only arise for metrics violating the strict DEC. This singles out the singular HPWs with profile $\sim u^{-2}$ as the backgrounds to consider in order to obtain insight into the properties of string theory near physically reasonable space-time singularities. For further discussions of these results and possible generalisations see the last section of [25].

6.5 Exercises for Section 6

1. The Szekeres-Iyer exponents

   Verify that the exponents p and q for the Schwarzschild and decelerating FRW metrics are (6.4),

   $$\text{Schwarzschild}: \qquad p = \frac{1-d}{d} \qquad q = \frac{2}{d} \ , \tag{6.40}$$

   and (6.7),

   $$\text{FRW}: \qquad p = q = \frac{2h}{1-h} \ , \tag{6.41}$$

   respectively.

2. The Reissner-Nordstrøm Metric

   Consider the $(d+2)$-dimensional spherically symmetric metric with[16]

$$f(r) = g(r)^{-1} = 1 - \frac{2m}{r^{d-1}} + \frac{Q^2}{r^{2(d-1)}} \quad . \tag{6.42}$$

   (a) Analyse the effective potential for null geodesics. Which null geodesics can reach the singularity at $r = 0$?

   (b) Determine the Szekeres-Iyer exponents p and q.

3. The Dominant Energy Condition

   Show that for a diagonal energy momentum tensor the DEC,

   - $T_{\mu\nu}v^\mu v^\nu \geq 0$, and
   - $T^\mu_\nu v^\nu$ is non-spacelike

   for all timelike v^μ, takes the form (6.36).

[16] Once again the notation is adapted to $D = d + 2 = 4$ where m and Q are the ADM mass and electric charge respectively.

A General Relativity: Notation and Conventions

Metrics and Geodesics

The arena for general relativity is a $D = (d+2)$-dimensional space-time equipped with a symmetric non-degenerate tensor $g_{\mu\nu}(x)$ of Lorentzian signature, the metric tensor, corresponding to the line element

$$ds^2 = g_{\mu\nu} dx^\mu dx^\nu \ . \tag{A.1}$$

We choose the "mostly plus" convention $(-+\cdots+)$.

The motion of particles is described by the geodesic equation

$$\ddot{x}^\mu + \Gamma^\mu_{\ \nu\lambda} \dot{x}^\nu \dot{x}^\lambda = 0 \ . \tag{A.2}$$

Here the Christoffel symbols $\Gamma^\mu_{\ \nu\lambda} = g^{\mu\rho}\Gamma_{\rho\nu\lambda}$ are related to the metric by

$$\Gamma_{\rho\nu\lambda} = \tfrac{1}{2}(\partial_\lambda g_{\rho\nu} + \partial_\nu g_{\rho\lambda} - \partial_\rho g_{\nu\lambda}) \ . \tag{A.3}$$

This geodesic equation extremises proper time τ, $d\tau^2 = -ds^2$, but can more simply and efficiently be obtained from the Euler-Lagrange equations of the Lagrangian

$$\mathcal{L} = \tfrac{1}{2} g_{\mu\nu} \dot{x}^\mu \dot{x}^\nu \ , \tag{A.4}$$

which is also valid for null geodesics.

Covariant Derivative

The covariant derivative ∇_μ generalises the ordinary partial derivative ∂_μ and maps tensors to tensors. It is completely characterised by the properties

$$\nabla_\mu g_{\nu\lambda} = 0 \ , \qquad [\nabla_\mu, \nabla_\nu] f = 0 \ , \tag{A.5}$$

wehre f is a function (scalar). On vectors, it acts as

$$\nabla_\mu V^\nu = \partial_\mu V^\nu + \Gamma^\mu_{\ \nu\lambda} V^\lambda \ . \tag{A.6}$$

The covariant derivative along a curve $x^\mu(\tau)$ is defined as

$$\frac{D}{D\tau} = \dot{x}^\nu \nabla_\nu \ , \tag{A.7}$$

and the geodesic equation can alternatively be written as

$$\frac{D}{D\tau}\dot{x}^\mu = 0 \ . \tag{A.8}$$

Curvature

The Riemann curvature tensor is

$$R^\lambda{}_{\sigma\mu\nu} = \partial_\mu \Gamma^\lambda{}_{\sigma\nu} - \partial_\nu \Gamma^\lambda{}_{\sigma\mu} + \Gamma^\lambda{}_{\mu\rho}\Gamma^\rho{}_{\nu\sigma} - \Gamma^\lambda{}_{\nu\rho}\Gamma^\rho{}_{\mu\sigma} \ . \tag{A.9}$$

It satisfies

$$[\nabla_\mu, \nabla_\nu]V^\lambda = R^\lambda{}_{\sigma\mu\nu}V^\sigma \ . \tag{A.10}$$

The Ricci tensor and Ricci scalar are

$$R_{\mu\nu} = R^\lambda{}_{\mu\lambda\nu} \ , \qquad R = g^{\mu\nu}R_{\mu\nu} \ . \tag{A.11}$$

These sign conventions are such that the Ricci tensor and Ricci scalar of the unit n-sphere with its standard Riemannian metric are $R_{ij} = (n-1)g_{ij}$ and $R = n(n-1)$.

Einstein Equations

The Einstein equations are

$$G_{\mu\nu} = 8\pi G T_{\mu\nu} \tag{A.12}$$

where

$$G_{\mu\nu} = R_{\mu\nu} - \tfrac{1}{2}g_{\mu\nu}R \tag{A.13}$$

is the Einstein tensor, satisfying

$$\nabla^\mu G_{\mu\nu} = 0 \ , \tag{A.14}$$

and $T_{\mu\nu}$ is the energy-momentum tensor of the matter system under consideration. The vacuum Einstein equations are equivalent to the Ricci-flatness condition $R_{\mu\nu} = 0$.

Geodesic Deviation Equation

The geodesic deviation equation describes the tidal forces acting on extended objects (or families of geodesics). It reads

$$\frac{D^2}{D\tau^2}\delta x^\mu = R^\mu{}_{\nu\lambda\rho}\dot{x}^\nu \dot{x}^\lambda \delta x^\rho \ , \tag{A.15}$$

where δx^μ is the seperation vector between nearby geodesics.

Killing Vectors

Continuous symmetries of a metric correspond to infinitesimal motions leaving the metric invariant. Their generators are called Killing vector fields, and they satisfy the equations

$$\nabla_\mu K_\nu + \nabla_\nu K_\mu = 0 \ . \tag{A.16}$$

Given a Killing vector K, one can always locally introduce coordinates such that $K = \partial_y$ for some coordinate y. Then $K_\mu = g_{\mu y}$, and the Killing condition says simply that in such coordinates the components of the metric are y-independent, $\partial_y g_{\mu\nu} = 0$.

B The Hamilton-Jacobi Construction of Adapted Coordinates

We had seen in section 4.3 that the natural arena for constructing adapted coordinates is the Hamilton-Jacobi theory of null geodesic congruences, and that the adapted coordinate V could be identified with the corresponding Hamilton-Jacobi function S.

It remains to construct the transverse coordinates Y^k. To that end we will now briefly review some facts about solutions to the Hamilton-Jacobi equations (see e.g. [52, 53]).

The general solution to the HJ equation (4.13) can be rather involved but there usually exists a "complete" solution, complete in the sense that it depends on $d+2$ integration constants [52] ($d+2$ as in the rest of the paper is the space-time dimension).[17] For a complete solution to the HJ equation with integration constants α_μ, the associated geodesic congruence is $x^\mu = x^\mu(\tau, \alpha_\mu, x_0^\mu)$, where x_0^μ are the positions of the geodesics at $\tau = 0$, $x_0^\mu = x^\mu(0, \alpha_\mu, x_0^\mu)$. The initial value surface parameterised by the x_0^μ is a Cauchy surface for the HJ equation and can be represented algebraically by the equation $F(x^\mu) = 0$. For a well-posed initial value problem, we require that the hypersurface $F = 0$ has an everywhere timelike normal vector $(\partial F)^2 < 0$.

One of the integration constants α_μ simply represents a constant shift of S. Furthermore, the HJ equation is homogeneous of degree two, so if S is a solution, then κS, $\kappa = \text{const} \neq 0$, is also a solution. This scale invariance of the HJ equation is absorbed in the first order geodesic equations, (4.14) by a scale transformation of the affine parameter τ.

[17] It is not always guaranteed that such a complete solution exists, though in all the cases that we consider here it does. The most general solution to (4.13) is much more complicated and can be constructed from a complete solution by looking at x-dependent hypersurfaces in the space of integration constants by the method of envelopes [53].

Therefore, there are only d non-trivial integration constants which we will denote by α_k, $k = 1, \ldots, d$.

Given a particular null geodesic γ, the integration constants α_k can be uniquely fixed. Indeed let $p^0_\mu = g_{\mu\nu}\dot{x}^\nu|_{\tau=0}$ be the momentum of the geodesic γ at $\tau = 0$. The mass-shell condition $g^{\mu\nu}p_\mu p_\nu = 0$ is scale invariant and therefore there are d independent momenta. These can be used to determine the integration constants of the HJ function S via the equation

$$p^0_\mu = \partial_\mu S|_{\tau=0} \ . \tag{B.1}$$

Therefore we can use the HJ equation to embed a given null geodesic into a twist free null geodesic congruence determined by the solution S.

Given a null geodesic γ, the coordinate transformation from the original coordinates x^μ of space-time to the Penrose coordinates can be defined using the HJ function S and coordinates x^μ_0 of the Cauchy hypersurface, as follows:

We first parameterize the null geodesic congruence as described above

$$x^\mu = x^\mu(\tau, x^\nu_0) \tag{B.2}$$

$$F(x^\mu_0) = 0 \ . \tag{B.3}$$

We have suppressed the integration constants α_μ because they are specified by the momentum of the null geodesic γ. Then we set

$$\begin{aligned} U &= \tau \\ V &= S(x^\mu_0) \ . \end{aligned} \tag{B.4}$$

Note that $S(x^\mu) = S(x^\mu_0)$ because $\dot{S} = 0$. It remains to determine the coordinates Y^k from these data. For this observe that the level sets of S have null normal vector, because of (4.13), while the hypersurface $F = 0$ has a timelike normal vector. Thus we have

$$g^{\mu\nu}\partial_\mu S \partial_\nu F < 0 \ , \tag{B.5}$$

and the level sets of S intersect transversally the hypersurface $F = 0$. The coordinates Y^k are found by solving the equations $F(x^\mu_0) = 0$ and $S(x^\mu_0) = V$, i.e. Y^k are the coordinates of the transverse intersection of the $F = 0$ hypersurface with the level sets of the HJ function S. Using this, we can rewrite the first equation in (B.3) as

$$x^\mu = x^\mu(U, x^\nu_0(V, Y^k)) = x^\mu(U, V, Y^k) \ . \tag{B.6}$$

This is the transformation which relates a coordinate system on a space-time to the Penrose coordinates.

Note that for a generic space-time, there is no natural choice for the hypersurface $F = 0$, i.e. for the function F. Instead F should be thought of as a gauge fixing condition which is chosen at our convenience. The Penrose limit metric does not depend on the choice of F, different choices simply corresponding to different ways of labelling the geodesics of the congruence on which the adapted coordinates are based.

For the sake of completeness we will now show explicitly that in these coordinates the metric indeed takes the form (4.1). First of all, we clearly have

$$g_{UU} = g_{\mu\nu}\frac{\partial x^\mu}{\partial \tau}\frac{\partial x^\nu}{\partial \tau} = 0 \tag{B.7}$$

because the geodesics $x^\mu(\tau, x_0^\nu)$ are null. Moreover,

$$g_{UV} = g_{\mu\nu}\frac{\partial x^\mu}{\partial \tau}\frac{\partial x^\nu}{\partial V} = g_{\mu\nu}g^{\mu\rho}\partial_\rho S\frac{\partial x^\mu}{\partial V} = \frac{\partial x^\mu}{\partial V}\partial_\mu S = \frac{\partial V}{\partial V} = 1 \ , \tag{B.8}$$

and

$$g_{Ui} = g_{\mu\nu}\frac{\partial x^\mu}{\partial \tau}\frac{\partial x^\nu}{\partial Y^i} = g_{\mu\nu}g^{\mu\rho}\frac{\partial S}{\partial x^\rho}\frac{\partial x^\nu}{\partial Y^i} = \frac{\partial V}{\partial Y^i} = 0 \ . \tag{B.9}$$

C The Null Geodesic Deviation Equation (following [40])

To establish the relation between (5.9) and (5.10), we embed the null geodesic γ into some (arbitrary) null geodesic congruence. Via parallel transport one can construct a parallel pseudo-orthonormal frame E^A, $A = +, -, a$, along the null geodesic congruence,

$$ds^2 = 2E^+E^- + \delta_{ab}E^aE^b \ , \qquad \nabla_u E^A = 0 \tag{C.1}$$

such that the component E_+ of the co-frame E_A is

$$E_+ = \dot{x}^\mu\partial_\mu \ , \qquad E_+|_\gamma = \partial_u \ , \tag{C.2}$$

i.e. the restriction of E_+ to every null geodesic is the tangent vector of the null geodesic.

Infinitesimally the congruence is characterised by the *connecting vectors* Z representing the separation of corresponding points on neighbouring curves and satisfying the equation

$$L_{E_+}Z = [E_+, Z] = \nabla_{E_+}Z - \nabla_Z E_+ = 0 \ . \tag{C.3}$$

In a parallel frame, covariant derivatives along the congruence become partial derivatives,

$$E_+^\mu\nabla_\mu(Z^AE_A) = \nabla_u(Z^AE_A) = (\partial_u Z^A)E_A \ , \tag{C.4}$$

and since E_+ is null one has

$$g(E_+, E_+) = 0 \Rightarrow (\nabla_A E_+)^- = 0 \ . \tag{C.5}$$

Hence (C.3) implies that $(d/du)Z^- = 0$, and we can set $Z^- = 0$ without loss of generality. Then, using the geodesic equation $\nabla_u E_+ = 0$, one finds that

$$\nabla_Z E_+ = Z^b(\nabla_b E_+)^a E_a + Z^b(\nabla_b E_+)^+ E_+ \tag{C.6}$$

and the connecting vector equation (C.3) becomes

$$\frac{d}{du}Z^a = B^a_{\ b}Z^b \tag{C.7}$$

with

$$B^a_{\ b} = (\nabla_b E_+)^a \equiv E^a_\nu E^\mu_b \nabla_\mu E^\nu_+ \ , \tag{C.8}$$

and Z^+ determined by the Z^a via

$$\frac{d}{du}Z^+ = Z^b(\nabla_b E_+)^+ \ . \tag{C.9}$$

Note also that (C.5) implies that the trace of B is

$$\mathrm{tr}\, B \equiv B^a_{\ a} = \nabla_\mu E^\mu_+ = \frac{1}{\sqrt{-g}}\partial_\mu(\sqrt{-g}\dot{x}^\mu) \quad . \tag{C.10}$$

It follows from (C.7) that the transverse components Z^a satisfy the null geodesic deviation equation

$$\frac{d^2}{du^2}Z^a = A_{ab}(u)Z^b \ . \tag{C.11}$$

where

$$A^a_{\ b} = \frac{d}{du}B^a_{\ b} + B^a_{\ c}B^c_{\ b} \ . \tag{C.12}$$

Note that (C.11) is just a (time-dependent) harmonic oscillator equation with $(-A_{ab}(u))$ the matrix of frequency squares.

A routine calculation now shows that

$$A^a_{\ b} = E^a_\nu E^\mu_b R^\nu_{\ \lambda\rho\mu}\dot{x}^\lambda\dot{x}^\rho = -R^a_{\ +b+} \ , \tag{C.13}$$

with R the Riemann curvature tensor of the metric g, establishing the equivalence of (5.9) and (5.10).

Alternatively, this can be understood in terms of the standard evolution equations for the expansion, shear and twist of a null geodesic congruence (see e.g. [40, Section 4.2] or [42, Section 9.2]), which are equal to the trace, trace-free symmetric and anti-symmetric part of B_{ab},

$$B_{ab} = E^\nu_a E^\mu_b \nabla_\mu p_\nu \ , \qquad p_\nu = g_{\nu\lambda}\dot{x}^\lambda \ , \tag{C.14}$$

respectively. From this point of view, the symmetry of A_{ab}, i.e. the vanishing of the antisymmetric part of $\dot{B} + B^2$, is equivalent to the evolution equation for the twist,

and the equivalence of (5.9) and (5.10) is the content of the evolution equation for the symmetric part of B_{ab} whose trace is the Raychaudhuri equation for null geodesics.

We see from (C.13) that, even though B_{ab} depends on the properties of the null geodesic congruence, the particular combination of expansion, shear and twist and their derivatives appearing in A_{ab} depends only on the components of the curvature tensor and the parallel frame along the original null geodesic. In particular, the geodesic deviation matrix $A_{ab}(u)$ is independent of how the null geodesic γ is embedded into some null congruence.

D Generalisations of Section 5.4: Brane Metrics, Isotropic Coordinates, Null Singularities

It is straightforward to generalise the analysis of section 5.4 to include longitudinal worldvolume directions,

$$f(r)(-dt^2) \to f(r)(-dt^2 + d\vec{y}^2) \ . \tag{D.1}$$

A parallel frame in the brane worldvolume directions is $E_i = f^{-1/2}\partial_{y^i}$, and

$$B_{ij} = \delta_{ij}\partial_u \log f(r(u))^{1/2} \tag{D.2}$$

which in turn leads to

$$A_{ij} = \delta_{ij} f(r(u))^{-1/2}\partial_u^2 \log f(r(u))^{1/2} \ . \tag{D.3}$$

The remaining of the components of A are as in section 5.4.

Likewise, for isotropic coordinates,

$$ds^2 = -f(r)dt^2 + h(r)(dr^2 + r^2 d\Omega_d^2) \ , \tag{D.4}$$

a straightforward calculation reveals that

$$\mathrm{tr}\, B = \partial_u \log\left(\dot{r} r^d f^{\frac{1}{2}} h^{\frac{d+1}{2}} \sin^{d-1}(\theta)\right) \tag{D.5}$$

and

$$B_{22} = \partial_u \log\left(h^{\frac{1}{2}} r \sin(\theta)\right) \ . \tag{D.6}$$

These lead to

$$\begin{aligned} B_{11}(u) &= \partial_u \log\left(r\dot{r}hf^{1/2}\right) \\ B_{\hat{a}\hat{b}}(u) &= \delta_{\hat{a}\hat{b}}\partial_u \log(r h^{1/2}\sin\theta) \end{aligned} \tag{D.7}$$

with the corresponding second-derivative expressions for $A_{ab}(u)$. Again it is easy to include longitudinal directions.

Finally, we consider spherically symmetric null metrics of the form

$$ds^2 = 2g(x)dxdy + f(x)d\Omega_2^2 \ . \tag{D.8}$$

The geodesic equations are

$$\dot{x} = Pg^{-1} \ , \quad \dot{y} = -\frac{L^2}{P} f^{-1} \ , \quad \dot{\theta} = f^{-1}L \ , \tag{D.9}$$

where P and L are constants of motion. In this case, one finds

$$\mathrm{tr}\, B = \partial_u \log\bigl(\dot{x} g f \sin(\theta)\bigr) \tag{D.10}$$

and

$$B_{22} = \partial_u \log\bigl(f^{\frac{1}{2}} \sin(\theta)\bigr) \ . \tag{D.11}$$

Therefore, we have

$$\begin{aligned} K_1(u) &= Pf(u)^{1/2} \\ K_2(u) &= f(u)^{1/2} \sin\theta(u) \ . \end{aligned} \tag{D.12}$$

In particular, in terms of $r(x) = f(x)^{1/2}$, A_{22} once again takes the standard form (5.36)

$$A_{22}(u) = \frac{\ddot{r}(u)}{r(u)} - \frac{L^2}{r(u)^4} \ . \tag{D.13}$$

E Curvature of Szekeres-Iyer Metrics

For reference purposes we give here the non-vanishing components of the Ricci and Einstein tensors of the metric,

$$ds^2 = \eta x^p dy^2 - \eta x^p dx^2 + x^q d\Omega_d^2 \tag{E.1}$$

Indices i, j refer to the metric $\hat{g}_{ij}$ of the transverse sphere (or some other transverse space), with $\hat{R}_{ij}$ and $\hat{R}$ the corresponding Ricci tensor and Ricci scalar.

Christoffel Symbols

$$\begin{aligned} \Gamma^x_{\ xx} &= \Gamma^x_{\ yy} = \Gamma^y_{\ yx} = \frac{p}{2} x^{-1} \\ \Gamma^x_{\ ij} &= \eta \frac{q}{2} \hat{g}_{ij} x^{q-p-1} \\ \Gamma^i_{\ jx} &= \frac{q}{2} \delta^i_{\ j} x^{-1} \\ \Gamma^i_{\ jk} &= \hat{\Gamma}^i_{\ jk} \ . \end{aligned} \tag{E.2}$$

Ricci Tensor

$$\begin{aligned} R_{xx} &= \tfrac{1}{4}(2p + 2qd + pqd - q^2 d)x^{-2} \\ R_{yy} &= \tfrac{1}{4}p(qd-2)x^{-2} \\ R_{ij} &= \hat{R}_{ij} + \tfrac{1}{4}\eta q(qd-2)\hat{g}_{ij}x^{q-p-2} \\ &= (d-1)\hat{g}_{ij} + \tfrac{1}{4}\eta q(qd-2)\hat{g}_{ij}x^{q-p-2} \end{aligned} \tag{E.3}$$

Ricci Scalar

$$\begin{aligned} R &= \hat{R}x^{-q} - \tfrac{1}{4}\eta(4p + 4qd - d(d+1)q^2)x^{-(p+2)} \\ &= d(d-1)x^{-q} - \tfrac{1}{4}\eta(4p + 4qd - d(d+1)q^2)x^{-(p+2)} \end{aligned} \tag{E.4}$$

Einstein Tensor

$$\begin{aligned} G^x_x &= -\tfrac{1}{2}\hat{R}x^{-q} - \tfrac{1}{8}\eta dq((d-1)q + 2p)x^{-(p+2)} \\ &= -\tfrac{1}{2}d(d-1)x^{-q} - \tfrac{1}{8}\eta dq((d-1)q + 2p)x^{-(p+2)} \\ G^y_y &= -\tfrac{1}{2}\hat{R}x^{-q} + \tfrac{1}{8}\eta dq(2p + 4 - (d+1)q)x^{-(p+2)} \\ &= -\tfrac{1}{2}d(d-1)x^{-q} + \tfrac{1}{8}\eta dq(2p + 4 - (d+1)q)x^{-(p+2)} \\ G^i_j &= \hat{G}^i_j x^{-q} + \tfrac{1}{8}\eta(4p - 4q + 4qd - d(d-1)q^2)\delta^i_j x^{-(p+2)} \\ &= -\tfrac{1}{2}(d-1)(d-2)\delta^i_j x^{-q} + \tfrac{1}{8}\eta(4p - 4q + 4qd - d(d-1)q^2)\delta^i_j x^{-(p+2)} \end{aligned} \tag{E.5}$$

References

[1] J. Ehlers, W. Kundt, *Exact Solutions of the Gravitational Field Equations*, in *Gravitation: An Introduction to Current Research* (ed. L. Witten), Wiley, New York (1962) 49-101.

[2] D. Kramer, H. Stephani, E. Herlt, M. MacCallum, *Exact solutions of Einstein's field equations*, Cambridge University Press, Cambridge (1980).

[3] J. Bicak, *Selected solutions of Einstein's field equations: their role in general relativity and astrophysics*, Lect. Notes Phys. 540 (2000) 1-126, `gr-qc/0004016`.

[4] D. Amati, C. Klimcik, *Strings in a shock wave background and generation of curved geometry from flat space string theory*, Phys. Lett. B210 (1988) 92; *Nonperturbative computation of the Weyl anomaly for a class of nontrivial backgrounds*, Phys. Lett. B219 (1989) 443.

[5] G.T. Horowitz, A.R. Steif, *Space-Time Singularities In String Theory*, Phys. Rev. Lett. 64 (1990) 260; G.T. Horowitz, A.R. Steif, *Strings In Strong Gravitational Fields*, Phys. Rev. D42 (1990) 1950-1959.

[6] A.A. Tseytlin, *Exact solutions of closed string theory*, Class. Quant. Grav. 12 (1995) 2365-2410, `hep-th/9505052`.

[7] M. Blau, J. Figueroa-O'Farrill, C. Hull, G. Papadopoulos, *A new maximally supersymmetric background of IIB superstring theory*, JHEP 0201 (2002) 047, `hep-th/0110242`.

[8] R.R.Metsaev, *Type IIB Green-Schwarz superstring in plane wave Ramond-Ramond background*, Nucl. Phys. B625 (2002) 70-96, `hep-th/0112044`.

[9] R.R. Metsaev, A.A. Tseytlin, *Exactly solvable model of superstring in Ramond-Ramond plane wave background*, Phys.Rev. D65 (2002) 126004, `hep-th/0202109`.

[10] M. Blau, J. Figueroa-O'Farrill, C. Hull, G. Papadopoulos, *Penrose limits and maximal supersymmetry*, Class. Quant. Grav. 19 (2002) L87-L95, `hep-th/0201081`.

[11] D. Berenstein, J. Maldacena, H. Nastase, *Strings in flat space and pp waves from $\mathcal{N} = 4$ Super Yang Mills*, JHEP 0204 (2002) 013, `hep-th/0202021`.

[12] R. Penrose, *Any space-time has a plane wave as a limit*, in *Differential geometry and relativity*, Reidel, Dordrecht (1976) pp. 271–275.

[13] R. Gueven, *Plane wave limits and T-duality*, Phys. Lett. B482 (2000) 255–263, `hep-th/0005061`.

[14] M. Blau, J. Figueroa-O'Farrill, G. Papadopoulos, *Penrose limits, supergravity and brane dynamics*, Class. Quant. Grav. 19 (2002) 4753, `hep-th/0202111`.

[15] D. Sadri, M. Sheikh-Jabbari, *The plane-wave / super Yang-Mills duality*, `hep-th/0310119`.

[16] D. Marolf, S. Ross, *Plane Waves: To infinity and beyond!*, Class. Quant. Grav.19 (2002) 6289-6302, `hep-th/0208197`; *A new recipe for causal completions*, `gr-qc/0303025`; *Plane waves and spacelike infinity*, `hep-th/0303044`.

[17] D. Brecher, J. P. Gregory, P. M. Saffin, *String theory and the Classical Stability of Plane Waves*, `hep-th/0210308`.

[18] D. Marolf, L. Pando Zayas, *On the Singularity Structure and Stability of Plane Waves*, hep-th/0210309.

[19] V. Hubeny, M. Rangamani, *No horizons in pp-waves*, JHEP 0211 (2002) 021, hep-th/0210234; *Causal structures of pp-waves*, hep-th/0211195; *Generating asymptotically plane wave spacetimes*, hep-th/0211206; *Horizons and Plane Waves: a Review*, Mod. Phys. Lett. A18 (2003) 2699, hep-th/0311053.

[20] J.T. Liu, L. Pando Zayas, D. Vaman, *On Horizons and Plane Waves*, hep-th/0301187.

[21] J. Senovilla, *On the existence of horizons in space-times with vanishing curvature invariants*, JHEP 0311 (2003) 046, hep-th/0311172

[22] J. Beem, P. Ehrlich, K. Easley, *Global Lorentzian Geometry* (2nd edition), Monographs and Textbooks in Pure and Applied Mathematics, 202 (Marcel Dekker, Inc., New York, 1996).

[23] H.-J. Schmidt, *Why do all the curvature invariants of a gravitational wave vanish?*, G. Sardanashvily (Ed.) New frontiers in gravitation, Hadronic Press (1996) 337-344, gr-qc/9404037; H.-J. Schmidt, *Lectures on Mathematical Cosmology*, gr-qc/0407095.

[24] C. Patricot, *Kaigorodov spaces and their Penrose limits*, Class. Quant. Grav. 20 (2003) 2087-2102, hep-th/0302073.

[25] M. Blau, M. Borunda, M. O'Loughlin, G. Papadopoulos, *The universality of Penrose limits near space-time singularities*, JHEP 0407 (2004) 068, hep-th/0403252

[26] M. Blau, M. O'Loughlin, *Homogeneous Plane Waves*, Nucl. Phys. B654 (2003) 135-176, hep-th/0212135.

[27] M. Blau, M. Borunda, M. O'Loughlin, G. Papadopoulos, *Penrose Limits and Spacetime Singularities*, Class. Quant. Grav. 21 (2004) L43–L49, hep-th/0312029.

[28] F. Manasse, C. Misner, *Fermi normal coordinates and some basic concepts in differential geometry*, J. Math. Phys. 4 (1963) 735–745.

[29] E. Poisson, *A Relativist's Toolkit*, Cambridge University Press (2004); *The Motion of Point Particles in Curved Spacetime*, Living Rev. Relativity 7 (2004) 6, http://www.livingreviews.org/lrr-2004-6.

[30] M. Cahen, N. Wallach, *Lorentzian symmetric spaces*, Bull. Am. Math. Soc. 76 (1970) 585–591.

[31] J. Figueroa-O'Farrill, G. Papadopoulos, *Homogeneous fluxes, branes and a maximally supersymmetric solution of M theory*, JHEP 0108 (2001) 036, hep-th/0105308.

[32] G. Papadopoulos, J.G. Russo and A.A. Tseytlin, *Solvable model of strings in a time-dependent plane-wave background*, Class. Quant. Grav. 20 (2003) 969, hep-th/0211289.

[33] A. Keane, B. Tupper, *Conformal symmetry classes for pp-wave spacetimes*, Class. Quant. Grav. 21 (2004) 2037-2064.

[34] G. Gibbons, C. Patricot, *Newton-Hooke space-times, Hpp-waves and the cosmological constant*, Class. Quant. Grav. 20 (2003) 5225, hep-th/0308200.

[35] I. Ozsvath, E. Schücking, *An anti-Mach metric*, in *Recent Developments in General Relativity*, Pergamon Press (1962), 339-350.

[36] M. Blau, M. O'Loughlin, G. Papadopoulos, A. Tseytlin, *Solvable Models of Strings in Homogeneous Plane Wave Backgrounds*, Nucl. Phys. B673 (2003) 57-97, `hep-th/0304198`.

[37] R. Geroch, *Limits of spacetimes*, Commun. Math. Phys. 13 (1969) 180–193.

[38] S. Philip, *Penrose limits of homogeneous spaces*, `math.DG/0405506`.

[39] V. Hubeny, M. Rangamani, E. Verlinde, *Penrose Limits and Non-local theories*, JHEP 0210 (2002) 020, `hep-th/0205258`.

[40] S. Hawking, G. Ellis, *The Large Scale Structure of Space-Time*, Cambridge University Press (1973).

[41] G. Gibbons, *Quantized Fields Propagating in Plane-Wave Spacetimes*, Commun. Math. Phys. 45 (1975) 191-202.

[42] R. Wald, *General Relativity*, University of Chicago Press, Chicago (1984).

[43] L. Cornalba, M. Costa, *Time-dependent Orbifolds and String Cosmology*, Fortsch.Phys. 52 (2004) 145-199, `hep-th/0310099`.

[44] H. Fuji, K. Ito, Y. Sekino, *Penrose Limit and String Theories on Various Brane Backgrounds*, JHEP 0211 (2002) 005, `hep-th/0209004`

[45] K. Kunze, *T-Duality and Penrose limits of spatially homogeneous and inhomogeneous cosmologies*, Phys. Rev. D68 (2003) 063517, `gr-qc/0303038`.

[46] P. Szekeres, V. Iyer, *Spherically Symmetric Singularities and Strong Cosmic Censorship*, Phys. Rev. D 47 (1993) 4362-4371.

[47] M. Célérier, P. Szekeres, *Timelike and null focusing singularities in spherical symmetry: a solution to the cosmological horizon problem and a challenge to the cosmic censorship hypothesis*, Phys.Rev. D65 (2002) 123516, `gr-qc/0203094`.

[48] V.A. Belinskii, I.M. Khalatnikov, E.M. Lifshitz, *Oscillatory approach to a singular point in the relativistic cosmology*, Adv.Phys. 19 (1970) 525-573; V.A. Belinskii, I.M. Khalatnikov, E.M. Lifshitz, *A general solution of the Einstein equations with a time singularity*, Adv. Phys. 31 (1982) 639-667.

[49] G. Papadopoulos, *Power-law singularities in string theory and M-theory*, `hep-th/0404172`.

[50] H.J. de Vega, N. Sanchez, *Strings falling into space-time singularities*, Phys. Rev. D45 (1992) 2783-2793; H.J. de Vega, M. Ramon Medrano, N. Sanchez, *Classical and quantum strings near spacetime singularities: gravitational plane waves with arbitrary polarization*, Class. Quant. Grav. 10 (1993) 2007-2019.

[51] J. David, *Plane waves with weak singularities*, JHEP 0311 (2003) 064, `hep-th/0303013`.

[52] H. Goldstein, *Classical Mechanics*, Addison-Wesley, London (1980), Chapter 10.

[53] S. H. Benton, Jr. *The Hamilton-Jacobi Equation: A Global Approach*, Academic Press (1977), Chapter 1.